J200 ROOF RACK

INSTALL INSTRUCTIONS

REVISION E
24 May 2024

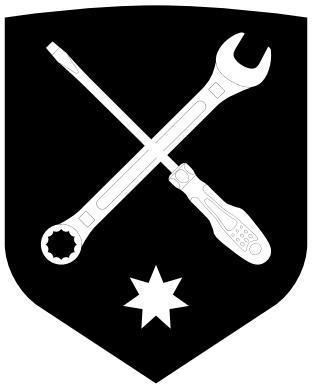

TABLE OF CONTENTS

	PAGE
PRE-INSTALLATION	*3*
MOUNTING RAILS	**5**
ROOF RACK (2x PLANKS) [1146mm]	**5**
ROOF RACK (2x HALF-PLANKS) [1146mm]	**6**
ROOF RACK (Platform Frame) [8.5 Plank]	**6**
ROOF RACK (4x PLANK END-CAPS)	**7**
ROOF RACK (4x HALF PLANK END-CAPS)	**7**
INSTALL START —> J200 ROOF RACK	*8*
INSTALL START —> HALF-PLANKS	*14*
TROUBLESHOOTING	*15*
MAINTENANCE & SUPPORT	*16*

PRODUCT INFORMATION

MODULAR DESIGN + GROUNDBREAKING CONFIGURABILITY

The modular nature of Chief Products' Roof Racks and Roof Rack Accessories, gives the user a vast amount of options depending on the application required. T-Nuts, Tie-Down Points, and Adjustable Load Rails can be quickly and easily repositioned as needed.

EXTENSIVE MOUNTING LOCATIONS

Chief Products' Roof Racks and Roof Rack Accessories, provide extensive mounting locations that can be used to easily mount most aftermarket accessories (Recovery Boards, Bike Holders, Jerry Can Holders, Kayaks, etc.).

IMPORTANT

PROPER INSTALLATION IS ESSENTIAL TO THE PERFORMANCE OF THIS PRODUCT.

ONLY INSTALL THIS PRODUCT ON THE DESIGNATED VEHICLE(S).

ONLY USE THE PROVIDED HARDWARE FOR INSTALLATION.

CHECK PRODUCT REGULARLY FOR DAMAGE. REPLACE IMMEDIATELY AT FIRST SIGN OF DAMAGE.

CHECK FASTENER TIGHTNESS REGULARLY AND TIGHTEN IF REQUIRED.

ATTENTION

WHEN PROPERLY INSTALLED THIS ROOF RACK DELIVERS INDEPENDENTLY TESTED LOAD RATINGS OF 150KG (Dynamic) & 460KG (Static). Testing results are certified to comply with Australian Standard (AS 1235-2000) as well as international standards (ISO / PAS 11154 : 2009:2006) and (DIN 75302/02: 1991).

FOR MAXIMUM SAFETY DO NOT EXCEED MANUFACTURERS ROOF WEIGHT LIMITS. Our load ratings represent the maximum mechanical forces this roof rack system can withstand before failure. Our load ratings do not address vehicle safety during high-speed manoeuvres, or changes to vehicle dynamics caused by a higher centre of gravity.

FOR MAXIMUM SAFETY, LOADS SHOULD BE EVENLY DISTRIBUTED AND PROPERLY SECURED TO AVOID SHIFTING DURING TRANSPORT. Before using your roof rack, it is important to familiarise yourself with the proper load securing techniques and be constantly safety oriented. Please note, all of our load ratings are based on an evenly distributed load.

BEFORE STARTING INSTALLATION

CHECK ALL PARTS HAVE ARRIVED.

CHECK REQUIRED TOOLS.

HELPFUL TIPS

LEFT & RIGHT SIDES ARE DEFINED FROM THE DRIVER'S POSITION.

DO NOT OVER-TIGHTEN FASTENERS.

FINAL TIGHTENING OF FASTENERS is best done after fitting all components into place and gradually tightening to achieve the best fit.

ANTI-SEIZE will prevent fasteners from becoming seized and ensure ease of disassembly in future.

PHOTOS ARE REPRESENTATIVE ONLY. Photos may show prototype parts, may be taken from multiple vehicles, and may be different than your vehicle. Due to global vehicle variances, model year changes and differing model options (engine, options, etc.) it is impossible to provide photos that are 100% accurate for all customers.

MOUNTING RAILS

BOX

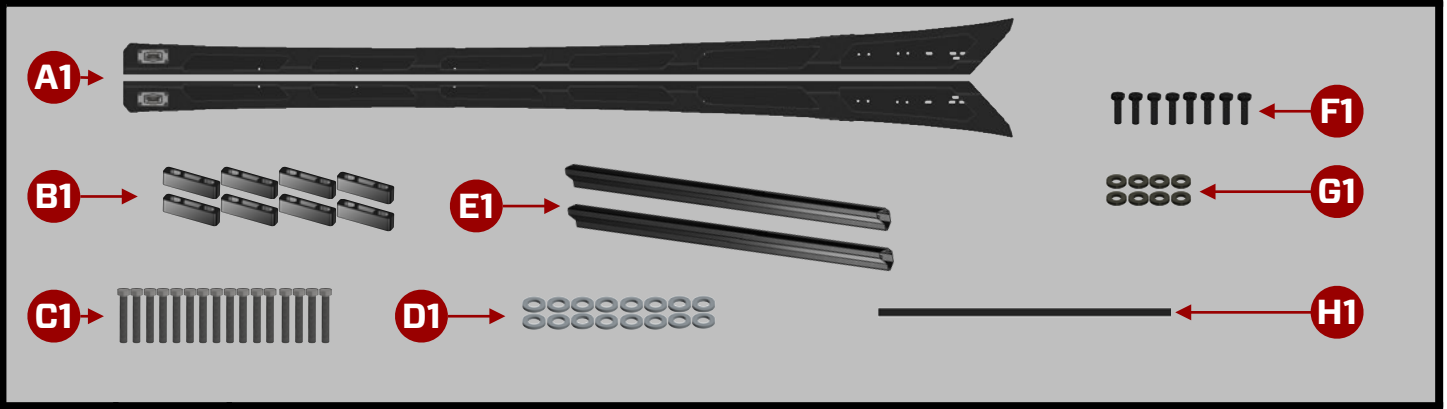

REF	QTY	DESCRIPTION
A1	*2*	Mounting Rails (Left + Right)
B1	*8*	Mounting Blocks
C1	*16*	M8 x 50mm Hex Head CL70 Bolt (SS316)
D1	*16*	M8 Wedge Lock Washer (SS316)
E1	*2*	ROOF RACK (Stealth Air-Dam)
F1	*8*	M6 x 20mm Hex Head CL70 Bolt (SS316) (BLACK)
G1	*8*	M6 Wedge-Lock Extended Washer (SS316)(BLACK)
H1	*1*	Butyl Rubber Seal Tape
-	*1*	4g Anti-Seize Pouch
-	*1*	Chief Product Shop Rag

ROOF RACK (2x PLANKS) [1146mm]

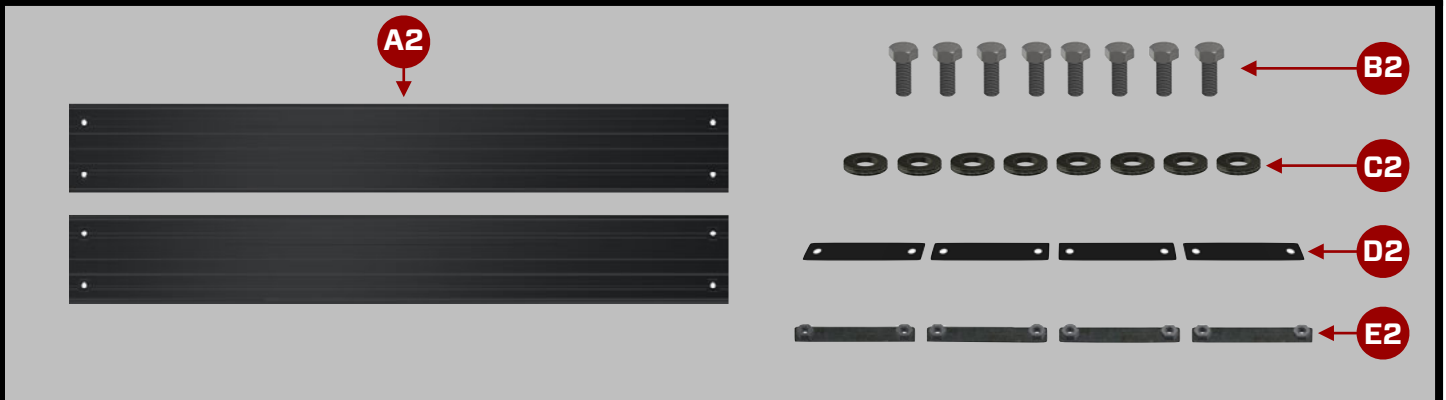

REF	QTY	DESCRIPTION
A2	*2*	Plank
B2	*8*	M8 x 20mm Hex Head CL70 Bolt (SS316)
C2	*8*	M8 Wedge-Lock Extended Washer (SS316) (BLACK)
D2	*4*	Rubber Isolater Strip
E2	*4*	M8 Fastening Plate

ROOF RACK (2x HALF-PLANKS) [1146mm]

BOX

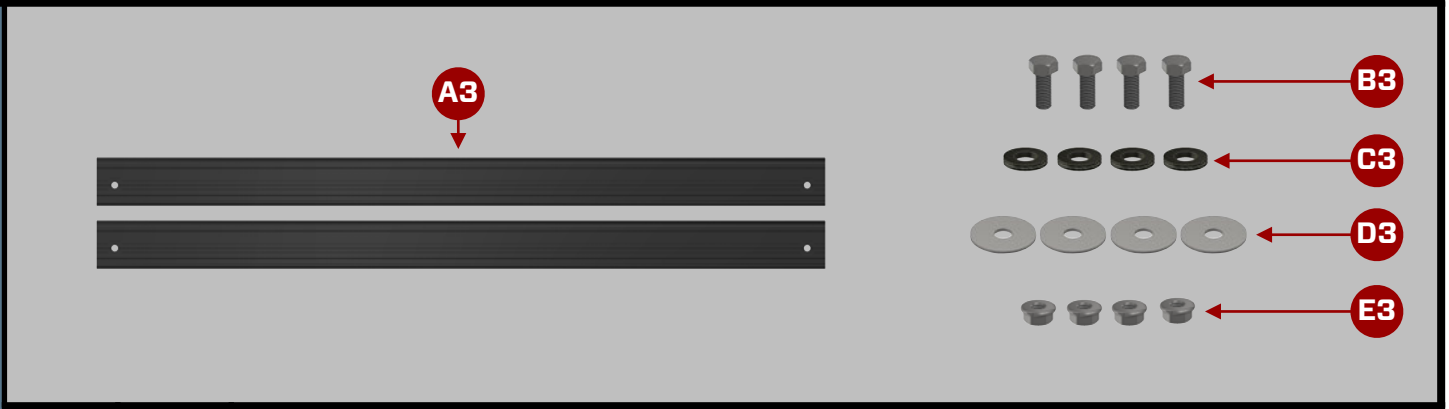

REF	QTY	DESCRIPTION
A3	*2*	Plank
B3	*4*	M8 x 25mm Hex Head CL70 Bolt (SS316)
C3	*4*	M8 Wedge-Lock Extended Washer (SS316) (BLACK)
D3	*4*	M8 x 32mm Washer (SS316)
E3	*4*	M8 Flange Nut

ROOF RACK (Platform Frame) [8.5 Plank]

BOX

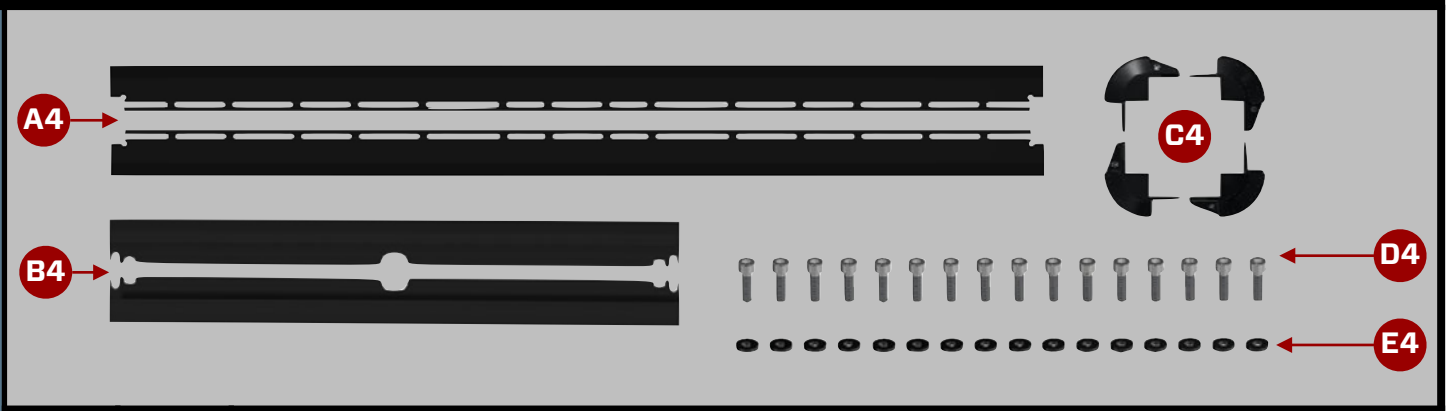

REF	QTY	DESCRIPTION
A4	*2*	Frame Rail (Left + Right)
B4	*2*	Frame Rail (Front + Rear)
C4	*4*	Frame Corner
D4	*16*	M6 x 20mm H5 Socket Cap Head CL70 Screw (SS316)
E4	*16*	M6 Wedge-Lock Extended Washer (SS316)(BLACK)

ROOF RACK (4x PLANK END-CAPS)

SATCHEL



REF	QTY	DESCRIPTION
A5	*4*	Plank End-Cap (Slotted)

ROOF RACK (4x HALF PLANK END-CAPS)

SATCHEL



REF	QTY	DESCRIPTION
A6	*4*	Half Plank End-Cap (Slotted)

REQUIRED TOOLS

- Socket Wrench
- 13mm Socket
- 10mm Socket
- 100mm Socket Wrench Extension
- 13mm Spanner
- Masking Tape
- Torque Wrench
- Tape Measure
- Pencil

1

Prepare ALL PARTS & COMPONENETS

1. Layout all parts and components to ensure that they are all present and correct.
2. Ensure that you have identified both the LHS & RHS side rails. This is Important when ensuring the correct fitment to the roof rack.

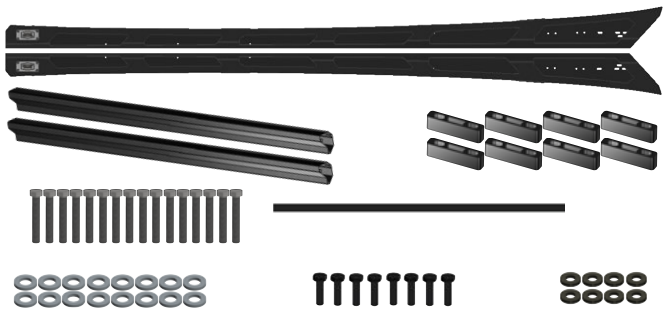

2

Prepare Toyota Landcruiser

1. Remove all roof hardware and weather strips that are currently on the vehicle and clean all areas thoroughly.
2. Remove the three mounting zone covers on each side of the vehicle.



3

Prepare MOUNTING BLOCKS [B1]

1. Align as close as practical to the centre of the vehicle for the FRONT and REAR of the Mounting Rails [A1] of the six locations on the roof of the vehicle.

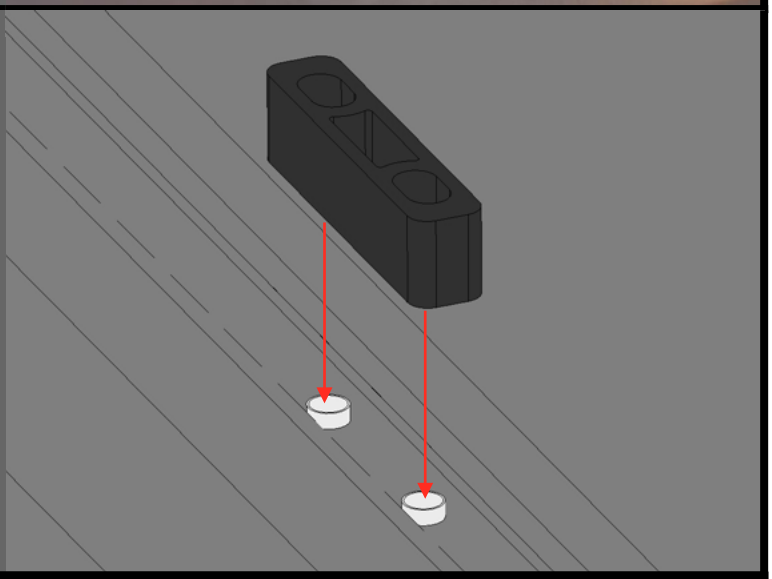

DAD JOKE

What do kids play when they have nothing else to do...?

Bored games!

4

Prepare MOUNTING BLOCKS 2

1. Place both the left and right Mounting Rails [A1] over the mounting blocks [B1]. Insert an M8 Wedge-Lock Washer [D1] & M8 x 50mm Hex Head [C1] along with some of the butyl rubber sealing tape [H1] around the bolt (bottom right photo). Insert the combinations through each of the access holes on the top face or side apertures of both Mounting Rails [A1].
2. Tighten all (18) bolts to “finger tight”.

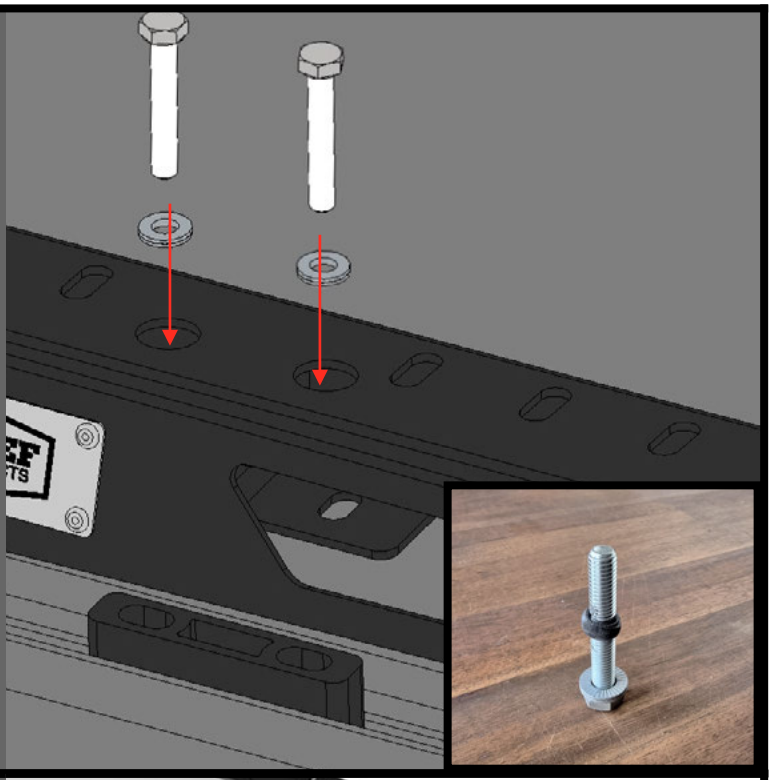

5

Attach AIR DAMS

1. Place one Air Dam [E1] in the upper position between the two Mounting Rails.
2. Assemble all the bolt combo’s using (8) of M6 x 20mm Hex Head CL70 Bolt [F1], M6 Wedge-Lock Extended Washer [G1].
3. Attach (2) bolts to each side of the Air Dam but do NOT tighten yet.
4. Place the 2nd Air Dam [E1] in the lower position between the two Mounting Rails.
5. Attach (2) bolts to each side on the 2nd Air Dam [E1].
6. Tighten all (8) bolts to “Finger Tight”

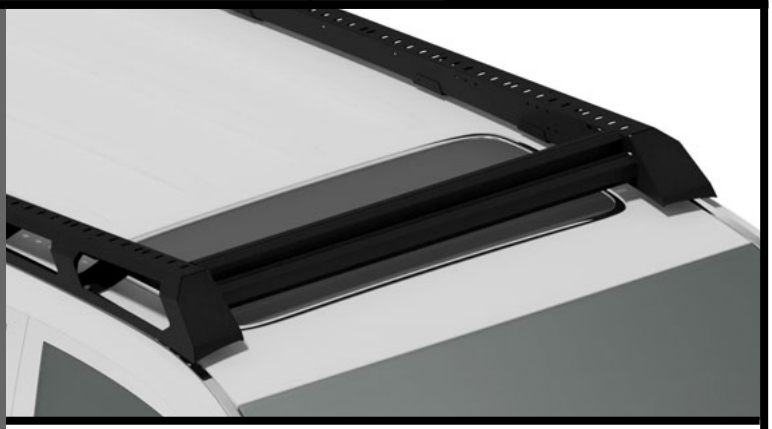



6

Position planks

1. Place (1) Plank [A2] towards the front of the mounting rails.
2. Place (1) Plank [A2] towards the rear of the mounting rails.

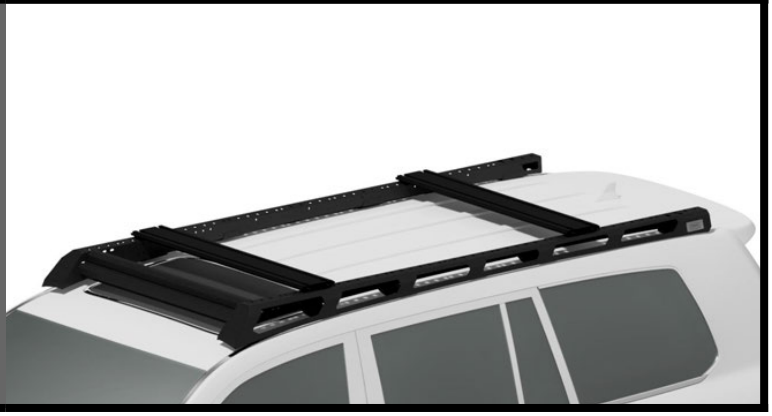

7

Attach 2 PLANKS

1. Create (4) Bolt & Washer Combos, by adding (1) M8 Wedge-Lock Extended Washer [C2] to (1) M8 x 20mm Hex Head Bolt [B2].
2. Using (2) Bolt & Washer Combos and (1) M8 Fastening Plate [E2] secure the end of each Plank [A2]. Place M8 Fastening Plate [E2] on underside of top face of Mounting Rail [A1] (bottom photo - M8 Fastening Plate in red).
3. Do this for the end of each Plank [A2].

NOTE
We will be removing these planks, this is just to help with the mounting rails install.

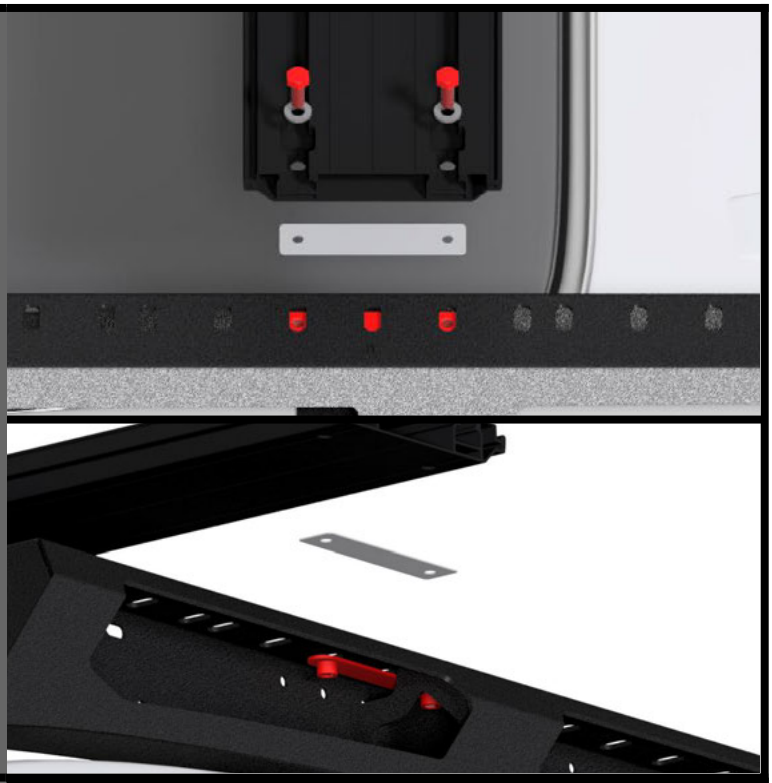

8

Align MOUNTING RAILS.

1. Align as close as practical to the centre of the Channel roof strip for the FRONT and REAR of the Mounting Rails [A1].
2. Ensure the Planks [A2] and Mounting Rails [A1] are centred on the roof of the vehicle.
3. Tighten (2) M8 Bolts [B2] at each end of the Planks [A2].

NOTE
Recommended M8 Bolt Torque = 23Nm (Dry) or 18Nm (Anti-Seize).

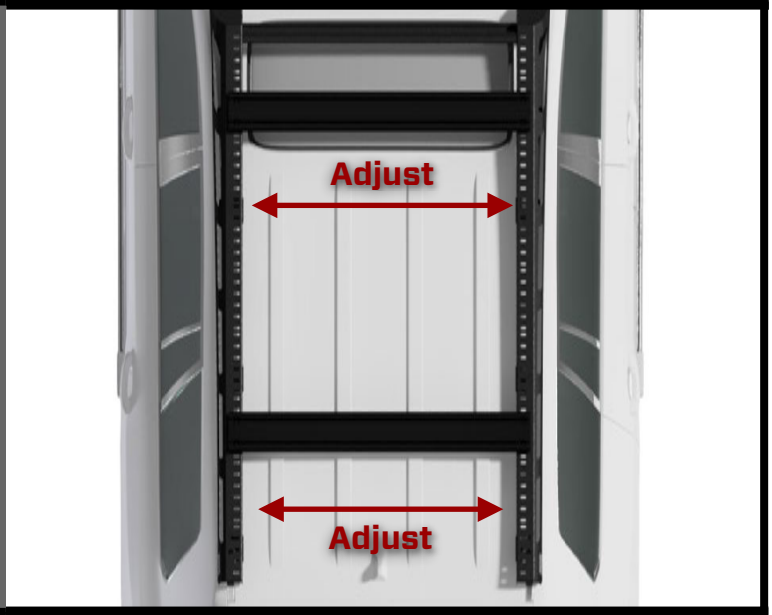

9

Finalize ALL ATTATCHMENTS

1. Tighten Air dam M6 x 20mm Bolt Hex Head to 14Nm (Dry) or 11Nm (Anti-Seize).
2. Fasten the x16 M8 x 50mm Hex Head Bolts [C1], this can be achieved through the access holes on the top face of the Mounting Rails [A1] as well as the side apertures. Torque bolts to 23 Nm (DRY) or 18Nm (Anti-Seize).

NOTE
Recommended M8 Bolt Torque = 23Nm (Dry) or 18Nm (Anti-Seize).



10

Remove attached PLANKS

1. Remove the Bolt [B2] and washer [C2] combo's from each end of the attached planks [A2] (Keep these to one side, you will need them later).
2. Remove both planks [A2] from the mounting rails [A1]

NOTE
Keeping the bolt combo's with the planks will make it easier when properly installing the planks.

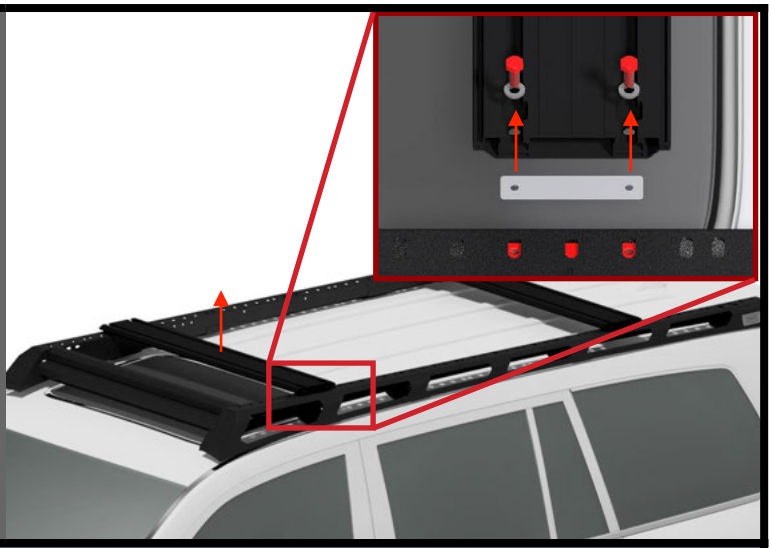

IF YOU'RE INSTALLING:

- APEX EDITION *(Go To Step 11).*
- SAFARI, OVERLAND, ROOF TOP TENT OR BARE BONES EDITION *(Go To Step 15).*

11

Prepare PLATFORM FRAME.

1. Place (2) Frame Rail (Front + Rear) [B4], (2) Frame Rail (Left + Right) [A4] and (4) Frame Corner [C4] in position (top photo).
2. Install (1) Frame Corner [C4] into each end of each Frame Rail (Front + Rear) [B4].
3. Create (16) Screw & Washer Combo's, by adding (1) M6 Wedge-Lock Extended Washer [E4] to (1) M6 x 20mm H5 Socket Cap Head Screw [D4].
4. Insert (2) Bolt & Washer Combo through inner face of the Frame Rail (Front + Rear) [B4] and tighten into Frame Corner [C4]. Do this for each Frame Corner [C4].

NOTE
Place parts on blanket to avoid scratches during installation.
Recommended M6 Bolt Torque = 18Nm (Dry) or 11Nm (Anti-Seize).

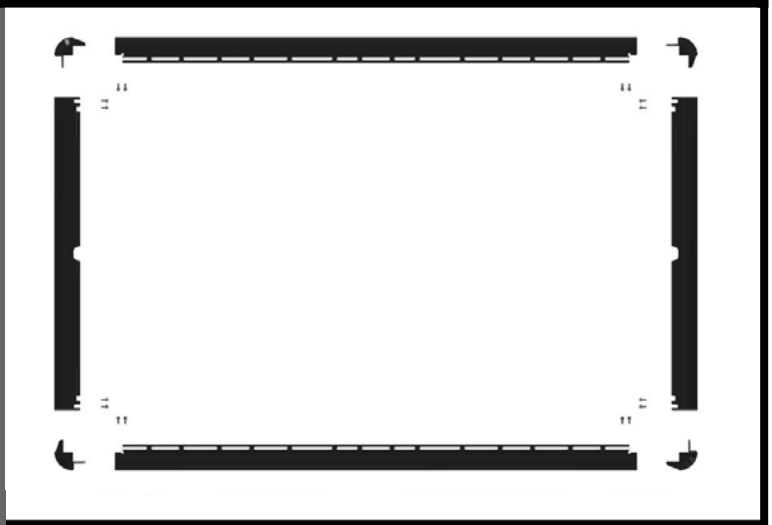

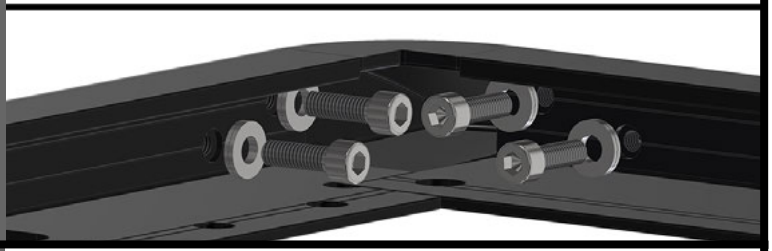

12

Prepare PLATFORM FRAME.

1. Place Platform Frame on Mounting Rails [A1]. Align rear edge of Platform Frame with rear edge of Mounting Rails [A1], (red arrow bottom photo).



13

Install PLANKS

1. Create (4) Bolt & Washer Combos, by adding (1) M8 Wedge-Lock Extended Washer [**C2**] to (1) M8 x 20mm Hex Head Bolt [**B2**].
2. Using (2) Bolt & Washer Combos and (1) M8 Fastening Plate [**E2**] secure the end of each Plank [**A2**]. Place M8 Fastening Plate [**E2**] on underside of top face of Mounting Rail [**A1**] (bottom photo - M8 Fastening Plate in red). Insert each Bolt & Washer Combo through Plank [**A2**], through (1) Rubber Isolator Strip [**D2**] (red arrows), through Platform Frame, through Mounting Rail [**A1**] and into M8 Fastening Plate [**E2**] (bottom photo). Loosely tighten.
3. Do this for the end of each Plank [**A2**].

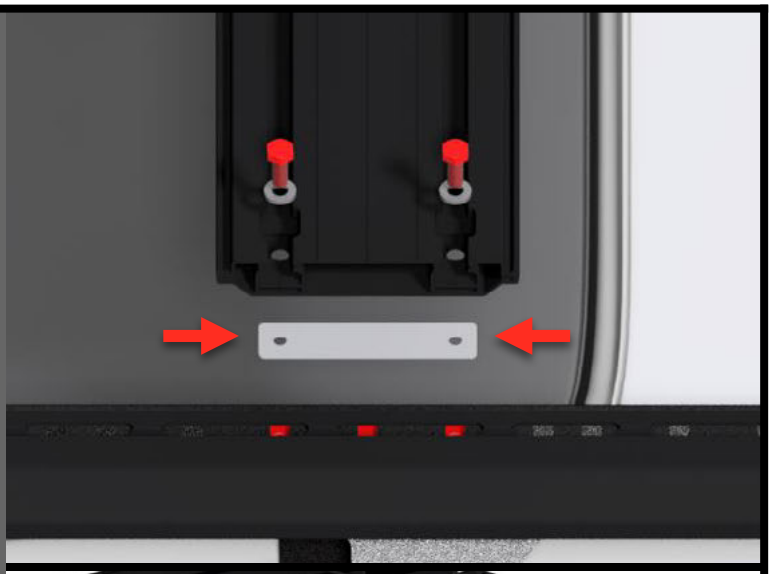



NOTE
Ensure the front lip of your Plank tucks into the Platform Frame. You may need to angle the Plank slightly so the front lip of the Plank slips under the top face of the Frame.

14

Install PLANKS.

* *You can now install your Planks in whatever configuration best meets your needs.*

1. Repeat 13.1 and 13.2 for each Plank [**A2**].
2. Tighten all fasteners.

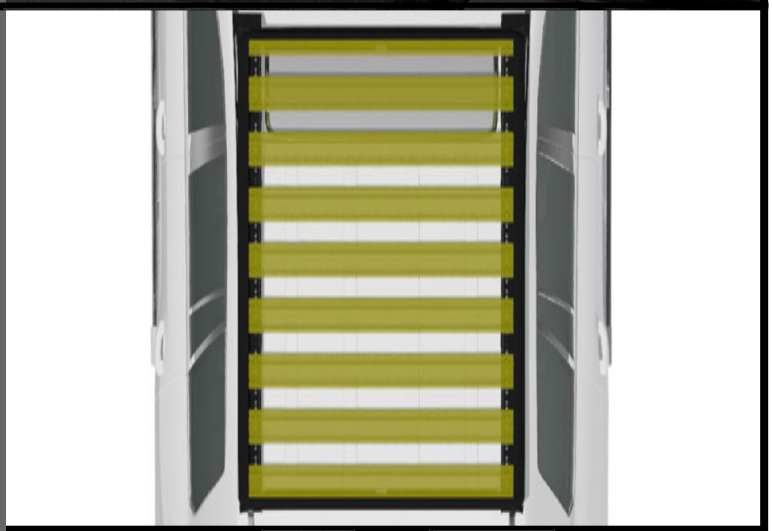



NOTE
Recommended M8 Bolt Torque = 23Nm (Dry) or 18Nm (Anti-Seize). If you're installing Tie-Down Plates, you can use a Tie-Down (Top) to ensure perfect spacing between each Plank (BOTTOM PHOTO).

ROOF RACK (Apex) is now fully installed

15

Install PLANKS.

1. Create (4) Bolt & Washer Combos, by adding (1) M8 Wedge-Lock Extended Washer [**C2**] to (1) M8 x 20mm Hex Head Bolt [**B2**].
2. Using (2) Bolt & Washer Combos and (1) M8 Fastening Plate [**E2**] secure the end of each Plank [**A2**]. Place M8 Fastening Plate [**E2**] on underside of top face of Mounting Rail [**A1**] (bottom photo - M8 Fastening Plate in red). Insert each Bolt & Washer Combo through Plank [**A2**], through (1) Rubber Isolator Strip [**D2**] (red arrows), through End Cap [**A5**], through Mounting Rail [**A1**] and into M8 Fastening Plate [**E2**] (top photo). Loosely tighten.
3. Do this for the end of each Plank [**A2**].

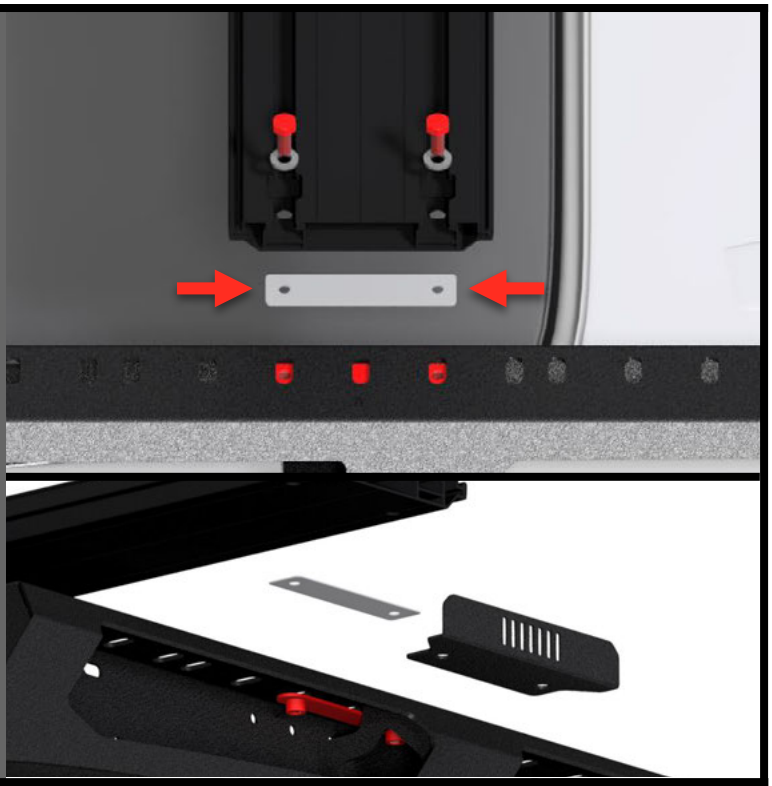

16

Install PLANKS.

* *You can now install your Planks in whatever configuration best meets your needs.*

1. Repeat 15.1 and 15.2 for each Plank [**A2**].
2. Tighten all fasteners.

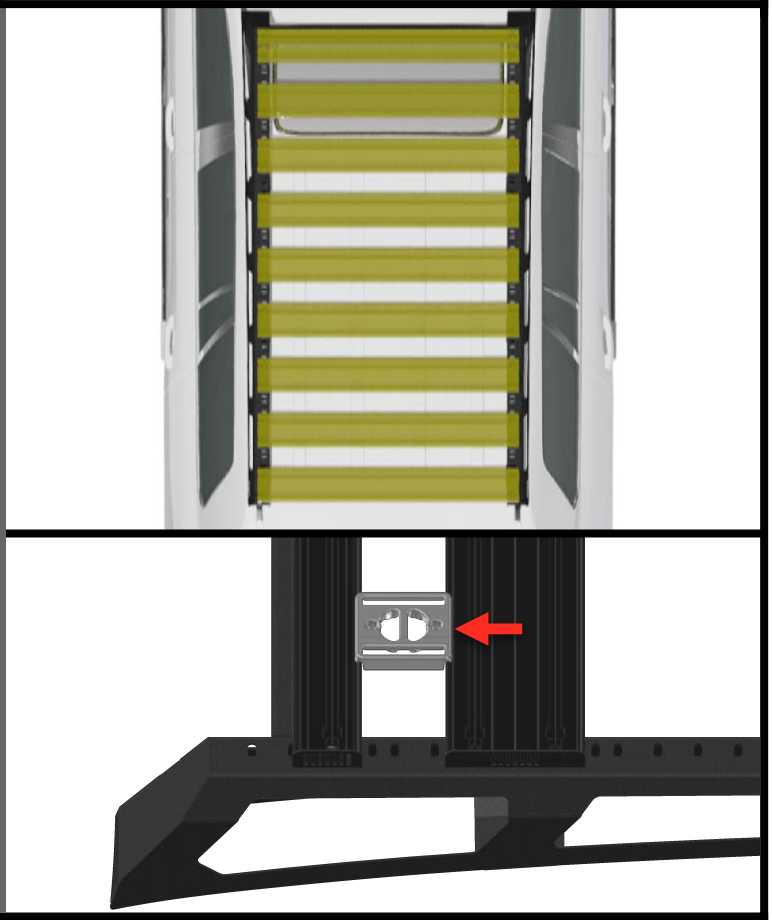

NOTE
Recommended M8 Bolt Torque = 23Nm (Dry) or 18Nm (Anti-Seize). If you're installing Tie-Down Plates, you can use a Tie-Down (Top) to ensure perfect spacing between each Plank (BOTTOM PHOTO).

J200 ROOF RACK is now fully installed

HALF-PLANKS

[START]

1

Install HALF-PLANKS

1. Create (2) Bolt & Washer Combos, by adding (1) M8 Wedge-Lock Extended Washer [**C3**] to (1) M8 x 25mm Hex Head Bolt [**B3**].
2. Using (1) Bolt & Washer Combos and (1) M8 Flange Nut (highlighted red)[**E3**] secure the end of each Plank [**A3**]. Place M8 Flange Nut [**E3**] beneath the M8 x 32mm Washer [**D3**] on the underside of top face of Mounting Rail [**A1**] (bottom photo). Insert each Bolt & Washer Combo through Plank [**A3**], through End Cap [**A6**], through Mounting Rail [**A1**], through M8 x 32mm Washer [**D3**] (red arrow) and into M8 Flange Nut [**E3**]. Loosely tighten.
3. Do this for the end of each Plank [**A3**].

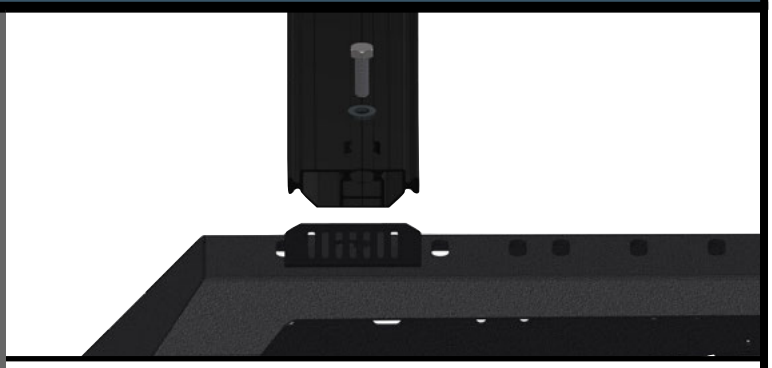

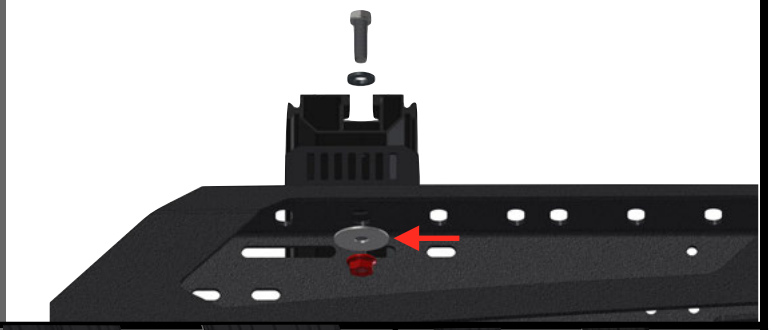

2

Half Plank uses

1. Half Planks can be assembled together to function the same as Full Planks or seperate to use with accessories that clamp around more standard roof bars.
2. Compatible with all other Chief Products attachment accessories.

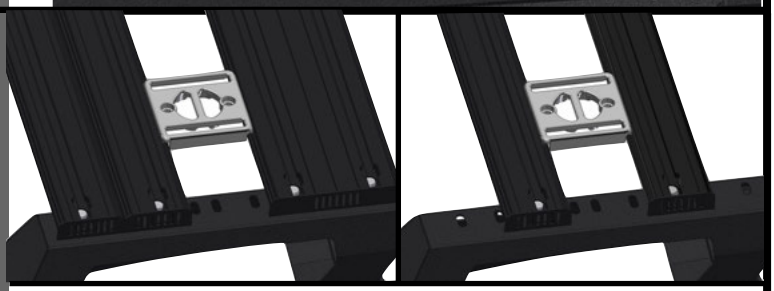

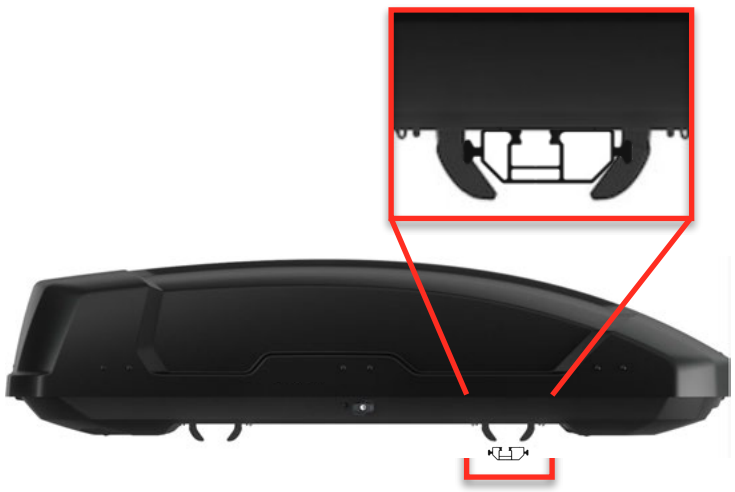

HALF-PLANKS

[END]

TROUBLESHOOTING

[START]

1 TROUBLESHOOTING

NOISE —> VIBRATIONS (HUMMING SOUND 50-80kph)

1. Check that all Rubber Isolator Strip [**D2**] have been installed properly. They should be positioned between Plank [**A2**] and Platform Frame or End Cap [**A5**].
2. If vibration persists; loosen (without removing) all fasteners retaining Planks [**A2**] and Mounting Rails [**A1**]. Tighten fasteners securing Mounting Rails [**A1**], then tighten fasteners securing Planks [**A2**].

NOTE
Mounting items on your rack will eliminate Plank vibrations.

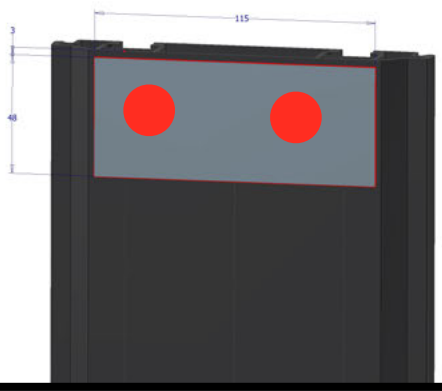

1 TROUBLESHOOTING

NOISE —> WIND (WHISTLING)

1. Check that all End-Caps [**A5** & **A6**] have been installed properly (Step 15). Open ended Planks can cause whistling noise.

1 TROUBLESHOOTING

SAFARI EDITION NOISE

1. Mounting the planks in the furthest back position while keeping standard plank spacing is the quietest setup for Safari edition users that encounter whistling.

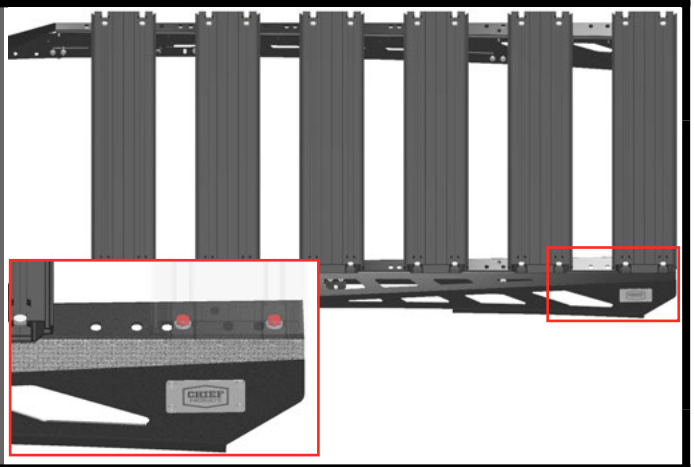

TROUBLESHOOTING

[END]

MAINTENANCE

FASTENERS
- Check fastener tightness regularly and tighten if required. We recommend checking fasteners after every large off-road trip.

CORROSION PROTECTION
- After an off-road trip; rinse all mud, sand or debris off the product.
- After driving in salt water; rinse product thoroughly with fresh water.

EXTRA CARE
- If you're planning to drive in a salty environment; spray fasteners with WD40 or an equivalent.
- If you're planning to drive in a salty environment; spray product with Lanolin or an equivalent.
- Spray deep scratches (before they rust) with touch up paint to help inhibit corrosion.

SUPPORT

Find answers online.
www.chiefproducts.com.au/pages/support

Having troubles? Make sure you've downloaded the most recent version of these instructions from our website. We occasionally make updates.
www.chiefproducts.com.au/installation/j200-roof-rack.pdf

If you need additional help, send us an email.
support@chiefproducts.com.au

SHARE

Looking to share epic photos of your LANDCRUISER?
Send us your photos - Unboxing, Fully Installed, Painted-In-Mud or out Adventuring in some beautiful location. If you share with us, we'll share with our followers.

UPLOAD
www.chiefproducts.com.au/share

EMAIL
connect@chiefproducts.com.au

HASHTAG
#ChiefProducts