P375-P703-AM2G-UP-UR ROOF RACK

INSTALL INSTRUCTIONS

REVISION E
15 May 2024

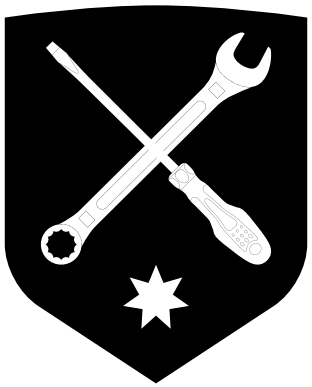

TABLE OF CONTENTS

	PAGE
PRE-INSTALLATION	*3*
MOUNTING RAILS	**5**
ROOF RACK (2x PLANKS) [1146mm]	**5**
ROOF RACK (2x HALF-PLANKS) [1146mm]	**6**
ROOF RACK (Platform Frame) [6 Plank]	**6**
P375-P703-AM2G-UP-UR ROOF RACK (AERO)	**7**
ROOF RACK (4x PLANK END-CAPS)	**7**
ROOF RACK (4x HALF PLANK END-CAPS)	**7**
INSTALL START --> P375-P703-AM2G-UP-UR ROOF RACK	*9*
INSTALL START --> P375-P703-AM2G-UP-UR ROOF RACK (Aero)	*12*
INSTALL START --> HALF-PLANKS	*19*
TIPS & TRICKS	*20*
TROUBLESHOOTING	*21*
MAINTENANCE & SUPPORT	*22*

PRODUCT INFORMATION

MODULAR DESIGN + GROUNDBREAKING CONFIGURABILITY

The modular nature of Chief Products' Roof Racks and Roof Rack Accessories, gives the user a vast amount of options depending on the application required. T-Nuts, Tie-Down Points, and Adjustable Load Rails can be quickly and easily repositioned as needed.

EXTENSIVE MOUNTING LOCATIONS

Chief Products' Roof Racks and Roof Rack Accessories, provide extensive mounting locations that can be used to easily mount most aftermarket accessories (Recovery Boards, Bike Holders, Jerry Can Holders, Kayaks, etc.).

IMPORTANT

PROPER INSTALLATION IS ESSENTIAL TO THE PERFORMANCE OF THIS PRODUCT.

ONLY INSTALL THIS PRODUCT ON THE DESIGNATED VEHICLE(S).

ONLY USE THE PROVIDED HARDWARE FOR INSTALLATION.

CHECK PRODUCT REGULARLY FOR DAMAGE. REPLACE IMMEDIATELY AT FIRST SIGN OF DAMAGE.

CHECK FASTENER TIGHTNESS REGULARLY AND TIGHTEN IF REQUIRED.

ATTENTION

WHEN PROPERLY INSTALLED THIS ROOF RACK DELIVERS INDEPENDENTLY TESTED LOAD RATINGS OF 150KG (Dynamic) & 460KG (Static). Testing results are certified to comply with Australian Standard (AS 1235-2000) as well as international standards (ISO / PAS 11154 : 2009:2006) and (DIN 75302/02: 1991).

FOR MAXIMUM SAFETY DO NOT EXCEED MANUFACTURERS ROOF WEIGHT LIMITS. Our load ratings represent the maximum mechanical forces this roof rack system can withstand before failure. Our load ratings do not address vehicle safety during high-speed manoeuvres, or changes to vehicle dynamics caused by a higher centre of gravity.

FOR MAXIMUM SAFETY, LOADS SHOULD BE EVENLY DISTRIBUTED AND PROPERLY SECURED TO AVOID SHIFTING DURING TRANSPORT. Before using your roof rack, it is important to familiarise yourself with the proper load securing techniques and be constantly safety oriented. Please note, all of our load ratings are based on an evenly distributed load.

BEFORE STARTING INSTALLATION

CHECK ALL PARTS HAVE ARRIVED.

CHECK REQUIRED TOOLS.

HELPFUL TIPS

LEFT & RIGHT SIDES ARE DEFINED FROM THE DRIVER'S POSITION.

DO NOT OVER-TIGHTEN FASTENERS.

FINAL TIGHTENING OF FASTENERS is best done after fitting all components into place and gradually tightening to achieve the best fit.

ANTI-SEIZE will prevent fasteners from becoming seized and ensure ease of disassembly in future.

PHOTOS ARE REPRESENTATIVE ONLY. Photos may show prototype parts, may be taken from multiple vehicles, and may be different than your vehicle. Due to global vehicle variances, model year changes and differing model options (engine, options, etc.) it is impossible to provide photos that are 100% accurate for all customers.

MOUNTING RAILS

BOX

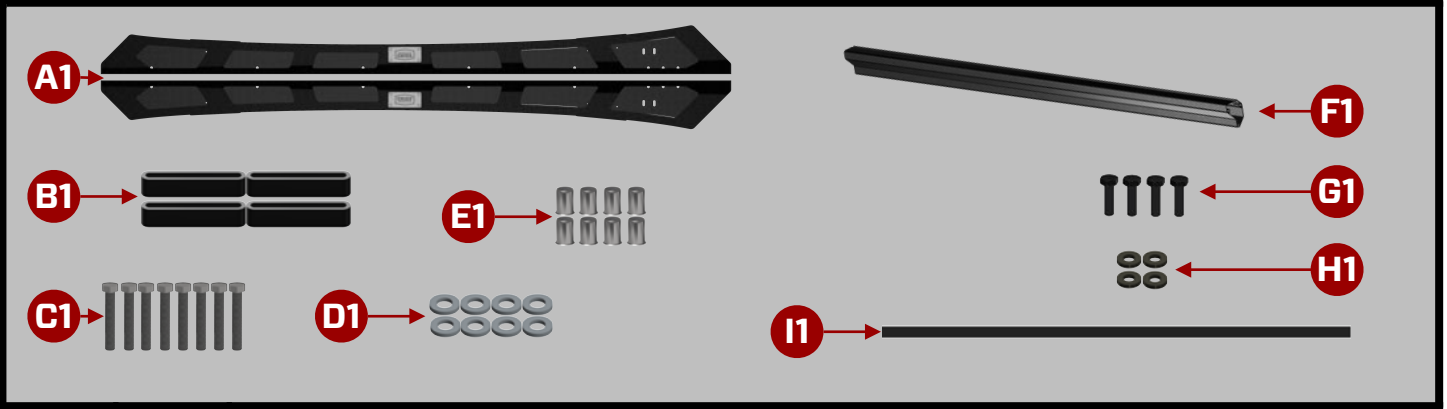

REF	QTY	DESCRIPTION
A1	*2*	Mounting Rails (Left + Right)
B1	*4*	Mounting Blocks
C1	*8*	M8 x 50mm Hex Head CL70 Bolt (SS316)
D1	*8*	M8 Wedge Lock Washer (SS316)
E1	*8*	M8 Nutsert Stainless Steel
F1	*1*	ROOF RACK (Stealth Air-Dam)
G1	*4*	M6 x 20mm Hex Head CL70 Bolt (SS316) (BLACK)
H1	*4*	M6 Wedge-Lock Extended Washer (SS316)(BLACK)
I1	*1*	Butyl Rubber Seal Tape
-	*1*	4g Anti-Seize Pouch
-	*1*	Chief Product Shop Rag

ROOF RACK (2x PLANKS) [1146mm]

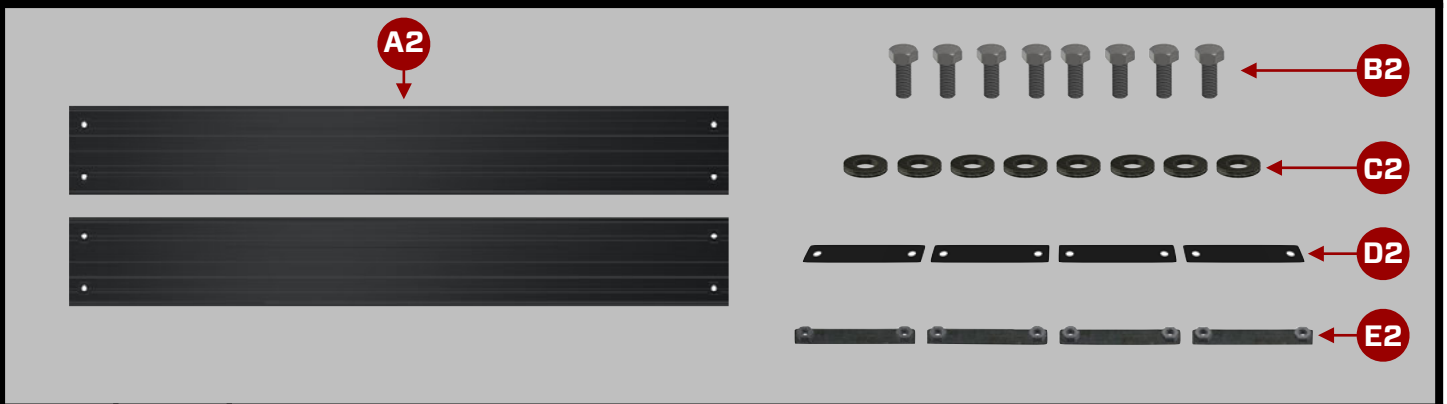

REF	QTY	DESCRIPTION
A2	*2*	Plank
B2	*8*	M8 x 20mm Hex Head CL70 Bolt (SS316)
C2	*8*	M8 Wedge-Lock Extended Washer (SS316) (BLACK)
D2	*4*	Rubber Isolater Strip
E2	*4*	M8 Fastening Plate

ROOF RACK (2x HALF-PLANKS) [1146mm]

BOX

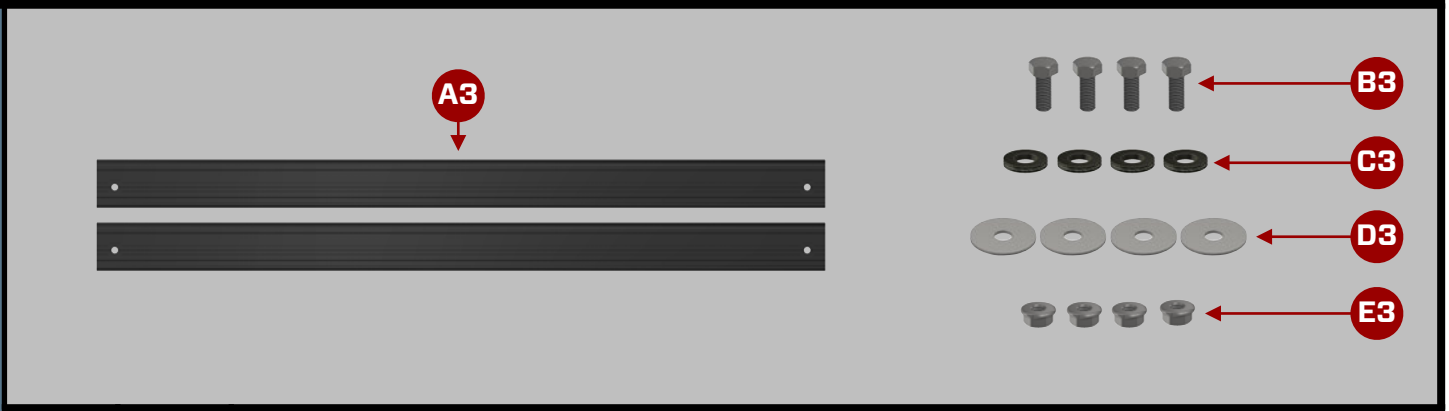

REF	QTY	DESCRIPTION
A3	*2*	Plank
B3	*4*	M8 x 25mm Hex Head CL70 Bolt (SS316)
C3	*4*	M8 Wedge-Lock Extended Washer (SS316) (BLACK)
D3	*4*	M8 x 32mm Washer (SS316)
E3	*4*	M8 Flange Nut

ROOF RACK (Platform Frame) [6 Plank]

BOX

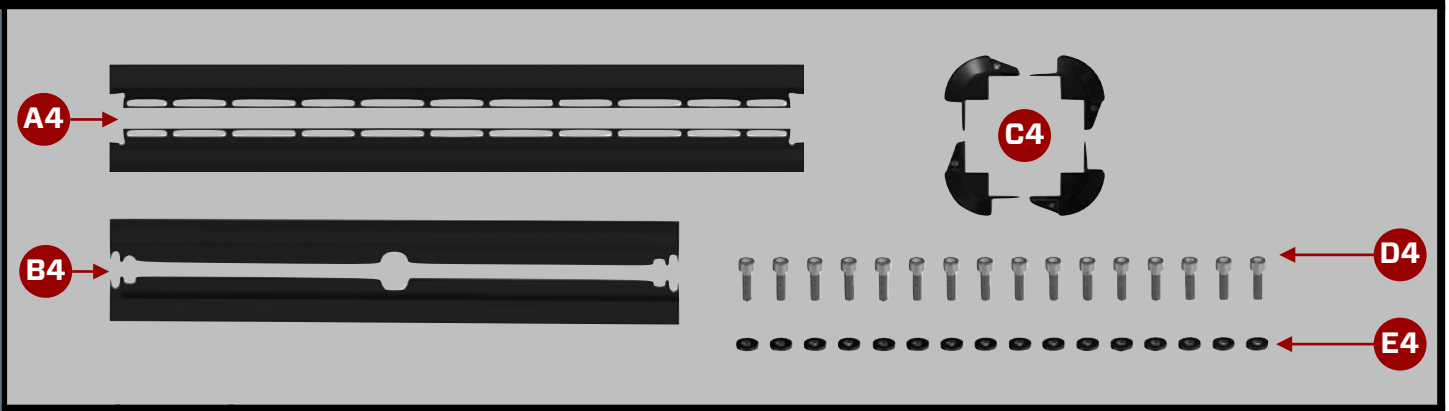

REF	QTY	DESCRIPTION
A4	*2*	Frame Rail (Left + Right)
B4	*2*	Frame Rail (Front + Rear)
C4	*4*	Frame Corner
D4	*16*	M6 x 20mm H5 Socket Cap Head CL70 Screw (SS316)
E4	*16*	M6 Wedge-Lock Extended Washer (SS316)(BLACK)

P375-P703-AM2G-UP-UR ROOF RACK (Aero)

BOX

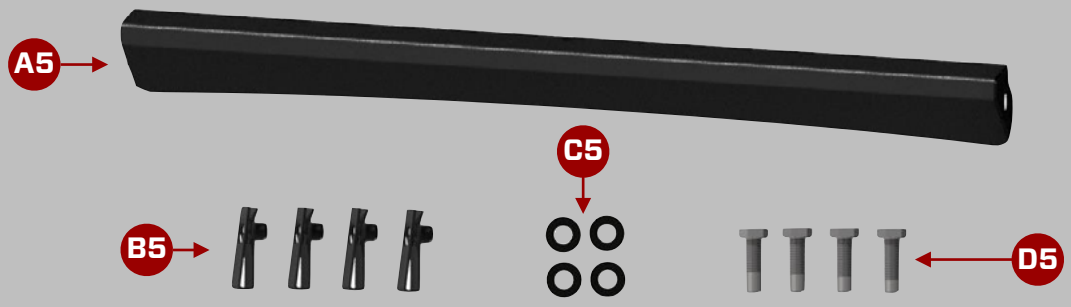

REF	QTY	DESCRIPTION
A5	*1*	ROOF RACK (Premium Air-Dam)
B5	*4*	M6 Speed Nut (J nut)
C5	*4*	M6 Wedge-Lock Extended Washer (SS316)(BLACK)
D5	*4*	M6 x 20mmHex Head CL70 Bolt (SS316)(BLACK)

ROOF RACK (4x PLANK END-CAPS)

SATCHEL



REF	QTY	DESCRIPTION
A6	*4*	Plank End-Cap (Slotted)

ROOF RACK (4x HALF PLANK END-CAPS)

SATCHEL



REF	QTY	DESCRIPTION
A7	*4*	Half Plank End-Cap (Slotted)

REQUIRED TOOLS

- Socket Wrench
- 13mm Socket
- 10mm Socket
- 100mm Socket Wrench Extension
- 13mm Spanner
- Power Drill
- 11.5mm Drill Bit
- 3/4mm Drill Bit
- Masking Tape
- Torque Wrench
- Tape Measure
- Pencil
- Centric Punch
- Hammer

1

Prepare ALL PARTS & COMPONENETS

1. Layout all parts and components to ensure that they are all present and correct.
2. Ensure that you have identified both the LHS & RHS side rails. This is Important when ensuring the correct fitment to the roof rack.

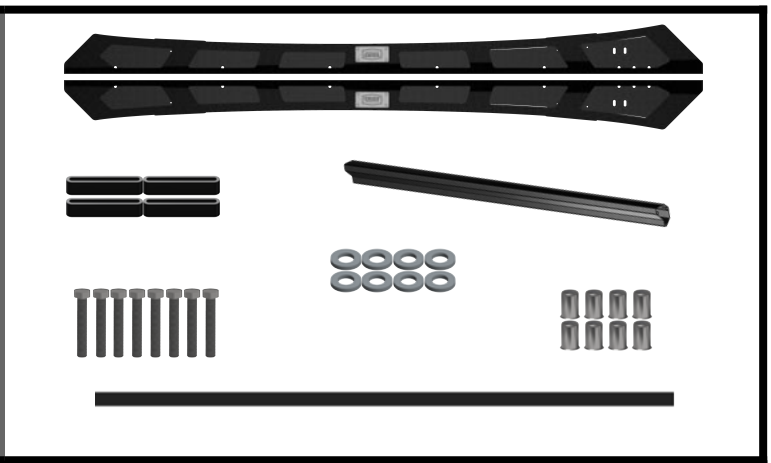

2

Prepare Ford Ranger

1. There are two options for dealing with the weather strip on the roof.
    1. Measure the points to where the mounting blocks will sit and cut portions of the weather strip.
    2. Remove all roof hardware and weather strips that are currently on the vehicle and clean all areas thoroughly.

Go to Tips and Tricks (page 14) for help with steps 2-8



3

Prepare Ford Ranger 2

1. Place wide runs of masking tape n the approximate area of the four fixing points on both sides of the vehicle.
2. All measurements are taken from the top edge of the windscreen glass and run backwards along the vehicle.
3. Mark drill points 1, 3 & 4 in the centre of the gutter. Point 2 should be marked 3mm outboard from the centre of the gutter.

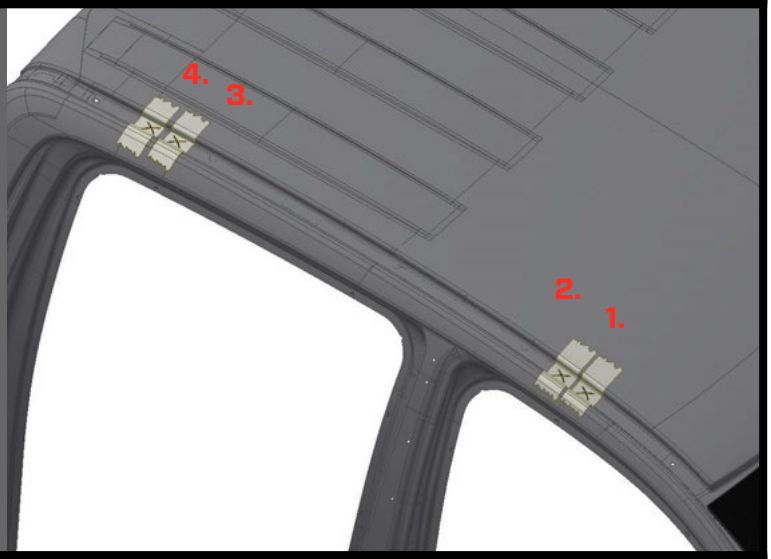

DAD JOKE

Why can't you run through a campground...?

You can only "ran" because its past tents!

4

Prepare Ford Ranger 3

1. Make sure to properly protect your vehicle before continuing. Best practice is placing down towels by the weather strips and taping them down as shown in the image.



5

Prepare FIXATION 'Front'

1. Measuring from the metal lip above the windshield, measure along the roof gutter 280mm to the first hole and mark on the top, then 80mm from the first mark.

NOTE:
For best fit, when marking the points to drill, ensure that mark 2 on this step is approximately 3mm outboard from the centre of the groove.

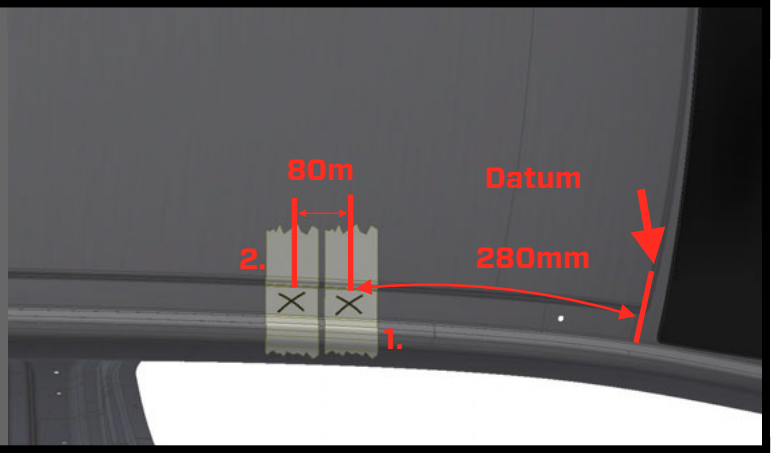

6

Prepare FIXATION 'Rear'

1. Measuring from the metal lip above the windshield, measure along the roof gutter 1206mm to the first hole and mark on the top, then 80mm from the first mark.

NOTE
Ensure that all fixation locations are marked in the centre of the roof gutter. All dimensions are common on both the RHS and LHS of the vehicle.



7

Prepare FIXATION Locations

1. Once locations have been marked, offer up both Mounting Rails [A1] sides onto the vehicle.
2. Using the front fixation marks as a datum, verify that all marked locations on the vehicle align with the fixation slots on the Mounting Rails [A1].

NOTE
If required, adjust marked locations to match the slots in the mounting rails so its best centred.

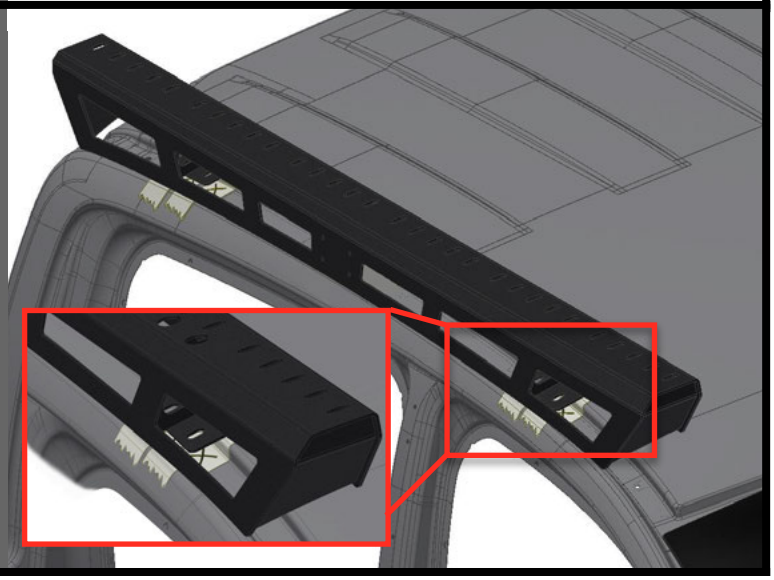

8

Prepare FIXATION Locations 2

1. Centre punch & drill at all 8 marked fixation locations with an 3mm drill bit to create pilot holes.
2. Switch to a 11.5mm drill bit and drill out all of the marked locations
3. Clean up all holes and remove any burrs.
4. Using the supplied M8 Nutserts [E1] drop into the 8 drilled holes and secure in-place using a Rivet Nut Gun.

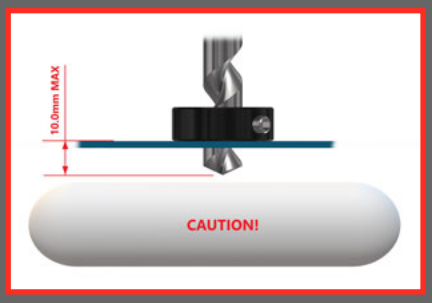



NOTE:
To avoid any damage to the interior of the channels it is *strongly* advised create a drill stop for the 11.5mm drill bit as shown.
Go to page 14 for tips and tricks for dealing with the roof.

9

Prepare FIXATION Locations 2

1. Place a generous amount of butyl tape [I1] around the Nutserts [E1].
2. Using the supplied M8 Nutserts [E1] drop into the 8 drilled holes and secure in-place using a Rivet Nut Gun.

NOTE:
It is *strongly* advised to add a rust inhibitor to all drilled holes prior to the rivets being installed.

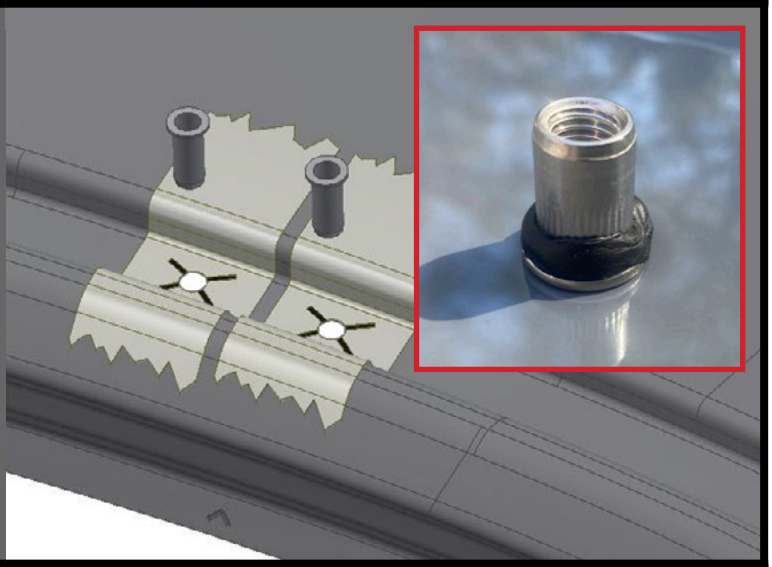

10

Attach MOUNTING RAILS

1. Over each M8 Nutsert [E1] locations, place a mounting block [B1].

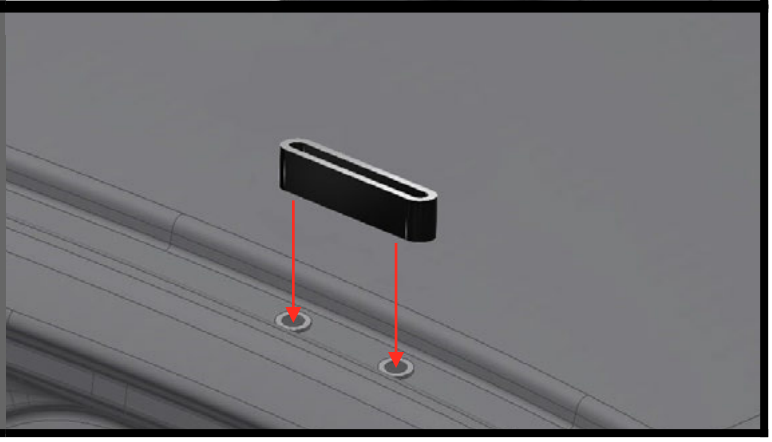

11

Attach MOUNTING RAILS 2

1. Place Mounting Rails [A1] over the in-place Mounting Blocks [B1]. Using 8x M8 x 50mm Hex Head Bolt [C1] & M8 Wedge-Lock Washer [D1] combination drop through each access hole on the top face of the Rails.
2. On all created bolt and washer combos place some butyl rubber sealing tape [I1] around the bottom third of the bolt (top left photo).
3. Tighten left and right hand Mounting Rail bolts finger tight.

NOTE:

Make sure to put the washer on the bolt before applying the buytle tape.

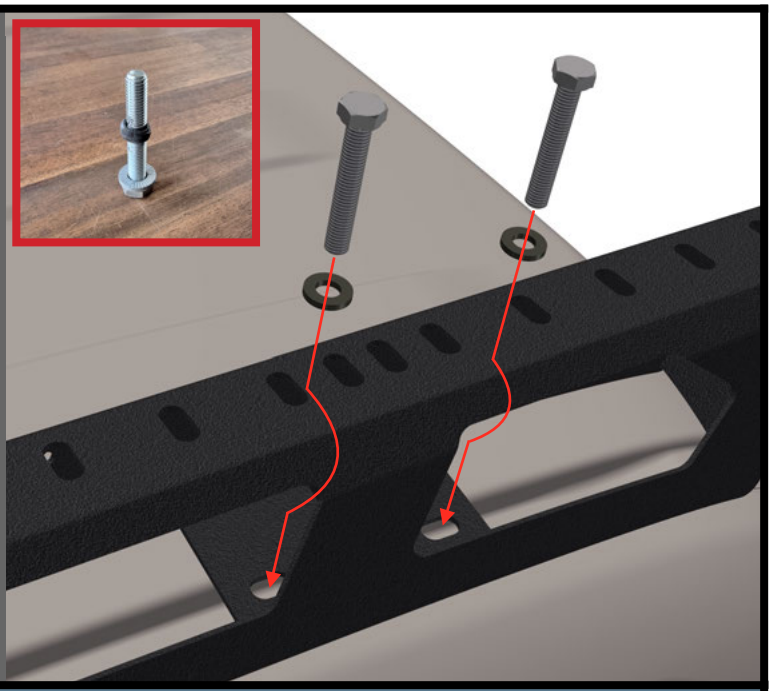

IF YOU'RE INSTALLING:

- STEALTH AIR-DAM *(Go to step 12)*
- P375-P703-AM2G-UP-UR ROOF RACK (Aero) *(Go to step 13)*

12

Attach STEALTH AIR DAM

1. Place the Stealth Air Dam [F1] in the rear position between the two Mounting Rails for the quietest set up.
2. Assemble all the bolt combo's using (4) of M6 x 20mm Hex Head CL70 Bolt [G1], M6 Wedge-Lock Extended Washer [H1].
3. Attach (2) bolts to each side on the Stealth Air Dam [F1].
4. Tighten all (8) bolts to "Finger Tight"

NOTE:
There are two positions to place the extruded Stealth Air dam, it is recommended that you position the Stealth Air dam in the rear most option for the quietest setup.



STEALTH AIR-DAM:

- Once the Stealth Air-Dam has been installed go to step 15.

13

Assemble P375-P703-AM2G-UP-UR ROOF RACK (Aero)

1. Attach (2) J-Nuts [**B5**] to each side of the Premium Air-Dam.

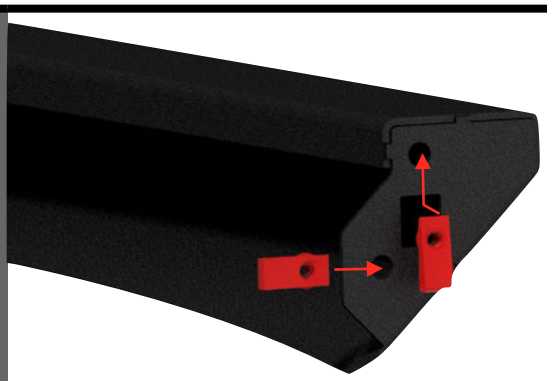

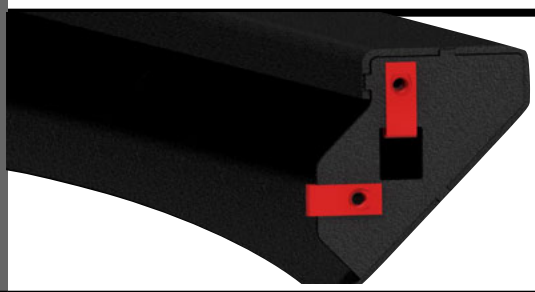

NOTE:
Bottom image is reference to what each side should look like when assembled.

14

Attach P375-P703-AM2G-UP-UR ROOF RACK (Aero)

1. Place the Premium Air Dam [**A5**] in line with the two Mounting Rails [**A1**].
2. Assemble all the bolt combo's using (4) of M6 x 20mm Hex Head CL70 Bolt [**D5**], M6 Wedge-Lock Extended Washer [**C5**].
3. Attach (2) bolts to each side on the Premium Air Dam [**A5**].
4. Tighten all (8) bolts to "Finger Tight"

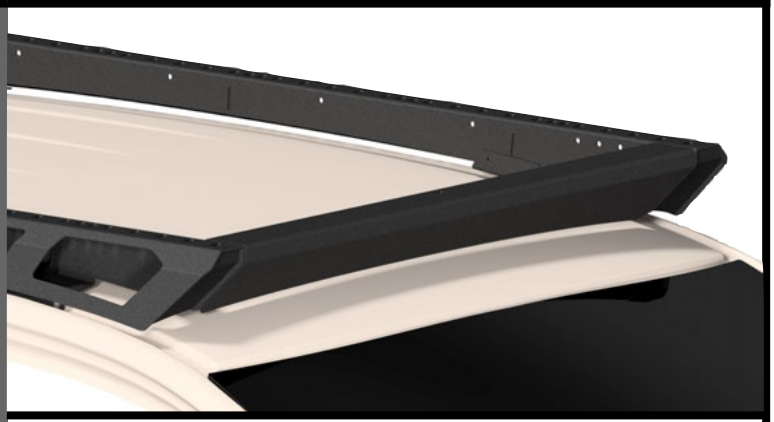



15

Position planks

1. Place (1) Plank [**A2**] towards the front of the mounting rails. SEE NOTE.
2. Place (1) Plank [**A2**] towards the rear of the mounting rails. SEE NOTE.

NOTE
We will be removing these planks, this is just to help with the mounting rails install.



16

Attach 2 PLANKS

1. Create (4) Bolt & Washer Combos, by adding (1) M8 Wedge-Lock Extended Washer [C2] to (1) M8 x 20mm Hex Head Bolt [B2].
2. Using (2) Bolt & Washer Combos and (1) M8 Fastening Plate [E2] secure the end of each Plank [A2]. Place M8 Fastening Plate [E2] on underside of top face of Mounting Rail [A1] (bottom photo - M8 Fastening Plate in red).
3. Do this for the end of each Plank [A2].

NOTE
We will be removing these planks, this is just to help with the mounting rails install.

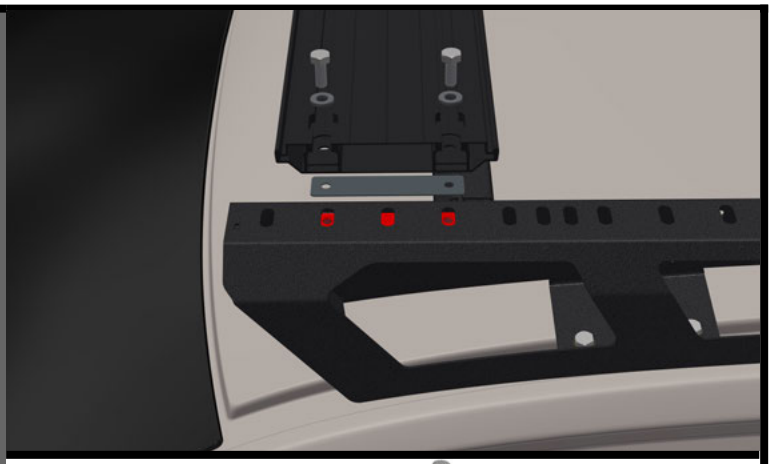



17

Align MOUNTING RAILS.

1. Align as close as practical to the centre of the Channel roof strip for the FRONT and REAR of the Mounting Rails [A1].
2. Ensure the Planks [A2] and Mounting Rails [A1] are centred on the roof of the vehicle.
3. Tighten (2) M8 Bolts at each end of the Planks [A2].

NOTE
Recommended M8 Bolt Torque = 23Nm (Dry) or 18Nm (Anti-Seize).

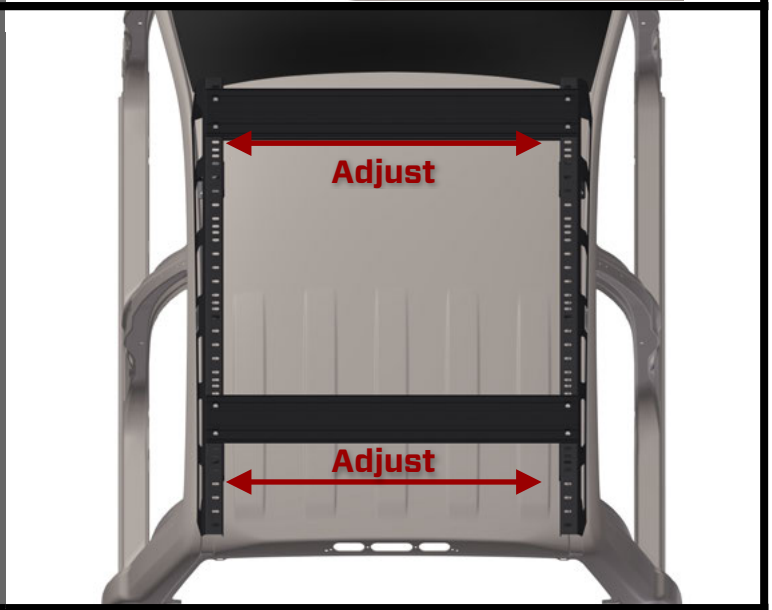

18

Finalize ALL ATTATCHMENTS

1. Tighten Stealth Air dam M6 x 20mm Bolt Button Head to 14Nm (Dry) or 11Nm (Anti-Seize).
2. Fasten the x8 M8 x 50mm Hex Head Bolts [C1] can be achieved through the access holes on the top face of the Mounting Rails [A1] as well as the side apertures. Torque bolts to 23 Nm (DRY) or 18Nm (Anti-Seize).

NOTE
Recommended M8 Bolt Torque = 23Nm (Dry) or 18Nm (Anti-Seize).

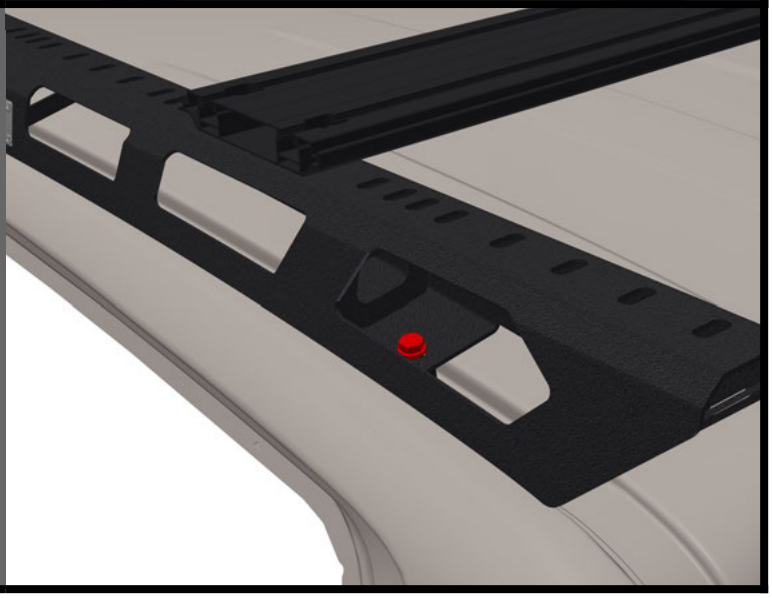

19

Remove attached PLANKS

1. Remove the Bolt [**B2**] and washer [**C2**] combo's from each end of the attached planks [**A2**] (Keep these to one side, you will need them later).
2. Remove both planks [**A2**] from the mounting rails [**A1**]



NOTE
Keeping the bolt combo's with the planks will make it easier when properly installing the planks.

IF YOU HAVE:

- APEX EDITION *(Go To Step 20).*
- SAFARI EDITION, OVERLAND EDITION, ROOF TOP TENT EDITION or BARE BONES EDITION *(Go To Step 25).*

20

Prepare PLATFORM FRAME.

1. Place (2) Frame Rail (Front + Rear) [**B4**], Place (2) Frame Rail (Left + Right) [**A4**] and (4) Frame Corner [**C4**] in position (top photo).
2. Install (1) Frame Corner [**C4**] into each end of each Frame Rail (Front + Rear) [**B4**].
3. Create (16) Screw & Washer Combos, by adding (1) M6 Wedge-Lock Extended Washer [**E4**] to (1) M6 x 20mm H5 Socket Cap Head Screw [**D4**].
4. Insert (2) Bolt & Washer Combo through inner face of Frame Rail (Left + Right) [**A4**] and loosely tighten into Frame Corner [**C4**]. Do this for each Frame Corner [**C4**].

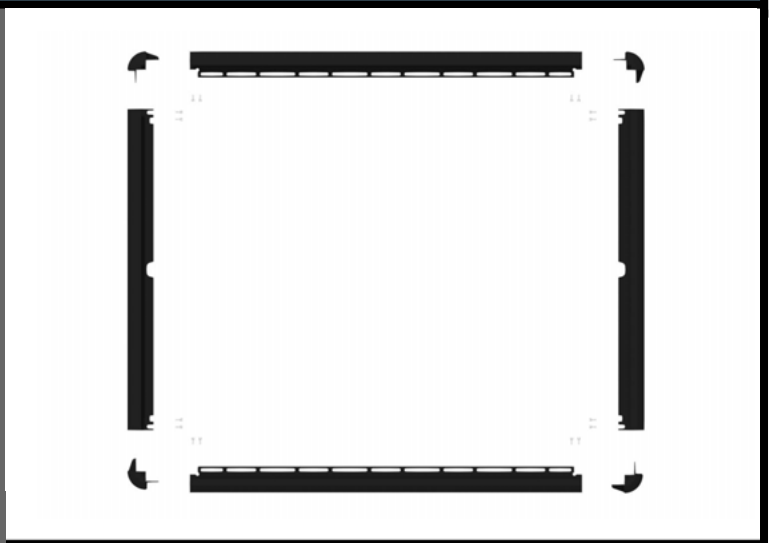

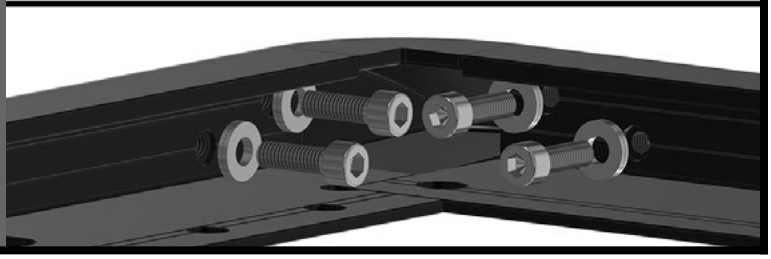

NOTE
Place parts on blanket to avoid scratches during installation.

21

Prepare PLATFORM FRAME.

1. Place Platform Frame on Mounting Rails [A1]. Align rear edge of Platform Frame with rear edge of Mounting Rails [A1], (red arrow bottom photo).
2. Tighten fasteners for each Frame Corner [C4].

NOTE
Recommended M6 Bolt Torque = 14Nm (Dry) or 11Nm (Anti-Seize).

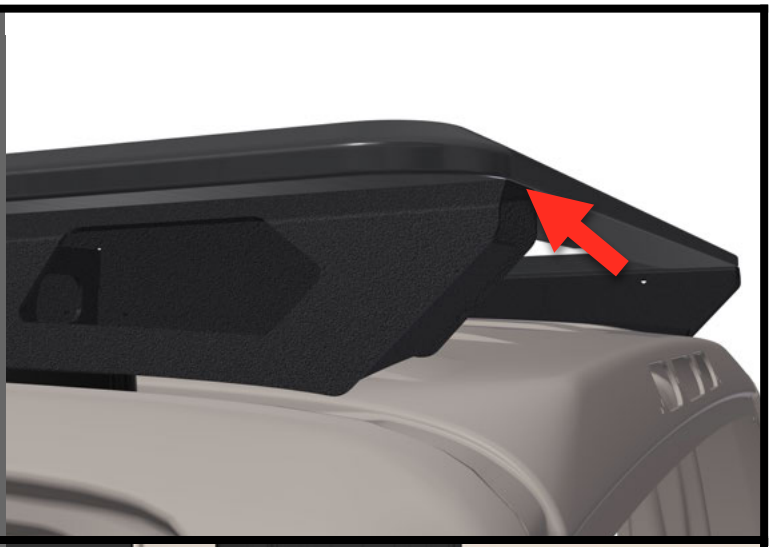

22

Install PLANKS.

1. Create (8) Bolt & Washer Combos, by adding (1) M8 Wedge-Lock Extended Washer [C2] to (1) M8 x 20mm Hex Head Bolt [B2].
2. Using (2) Bolt & Washer Combos and (1) M8 Fastening Plate [E2] secure the end of each Plank [A2]. Place M8 Fastening Plate [E2] on underside of top face of Mounting Rail [A1] (bottom photo - M8 Fastening Plate in red). Insert each Bolt & Washer Combo through Plank [A2], through (1) Rubber Isolator Strip [D2] (top photo - red arrows), through Platform Frame, through Mounting Rail [A1] and into M8 Fastening Plate [E2] (bottom photo). Loosely tighten.
3. Do this for the end of each Plank [A2].

NOTE
Ensure the front lip of your Plank tucks into the Platform Frame. You may need to angle the Plank slightly so the front lip of the Plank slips under the top face of the Frame.

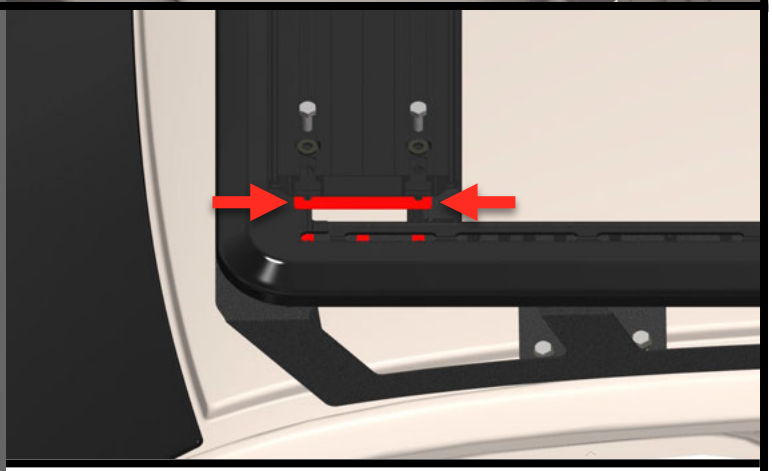



23

Align PLATFORM FRAME.

1. Align as close as practical to the centre of the car for the FRONT and REAR of the Mounting Rails [A1].
2. Ensure the Platform Frame, Planks [A2] and Mounting Rails [A1] are centred on the roof of the vehicle.
3. Tighten (2) M8 Bolts at each end of the Planks [A2].

NOTE
Recommended M8 Bolt Torque = 23Nm (Dry) or 18Nm (Anti-Seize).

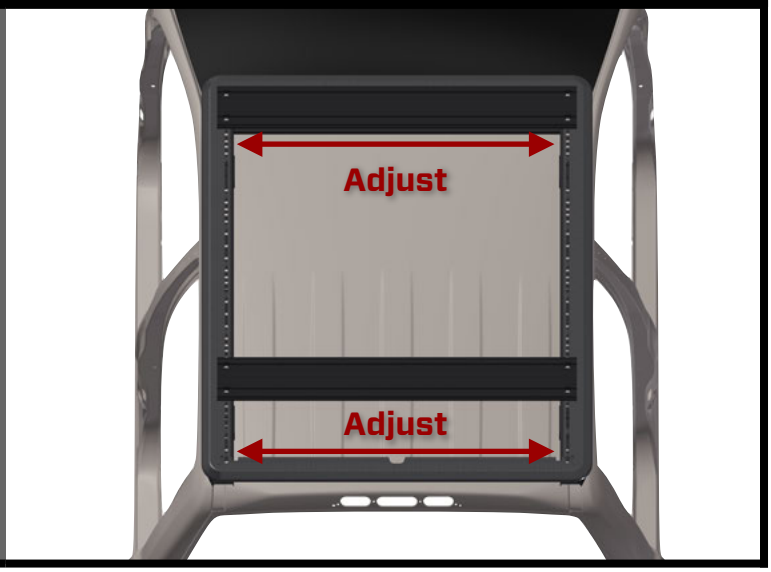

24

Install PLANKS.

* *You can now install your Planks in whatever configuration best meets your needs.*

1. Create (4) Bolt & Washer Combos, by adding (1) M8 Wedge-Lock Extended Washer [**C2**] to (1) M8 x 20mm Hex Head Bolt [**B2**].
2. Using (2) Bolt & Washer Combos and (1) M8 Fastening Plate [**E2**] secure the end of each Plank [**A2**]. Place M8 Fastening Plate [**E2**] on underside of top face of Mounting Rail [**A1**]. Insert each Bolt & Washer Combo through Plank [**A2**], through Rubber Isolator Strip [**A2**], through Platform Frame, through Mounting Rail [**A1**] and into M8 Fastening Plate [**E2**] (See Photos from Step 22).
3. Repeat 20.1 and 20.2 for each Plank [**A2**].
4. Tighten all fasteners.

NOTES
Recommended M8 Bolt Torque = 23Nm (Dry) or 18Nm (Anti-Seize).
If you're installing Tie-Down Plates, you can use a Tie-Down (Top) to ensure perfect spacing between each Plank (BOTTOM PHOTO).

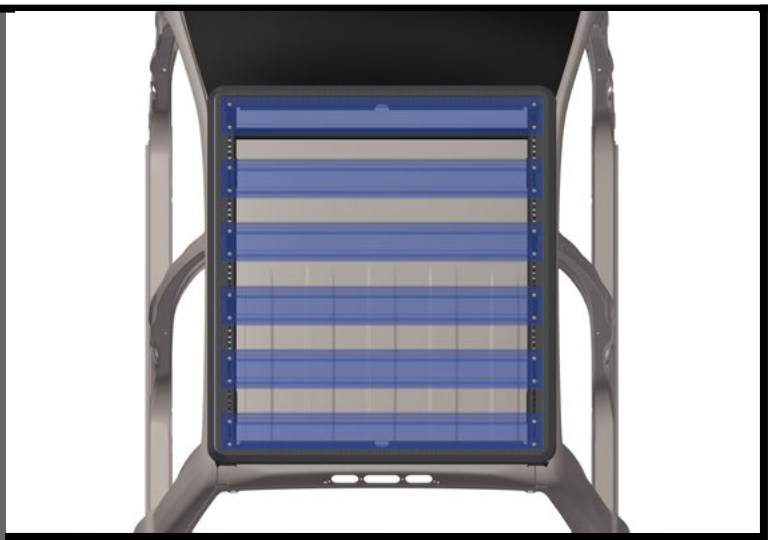

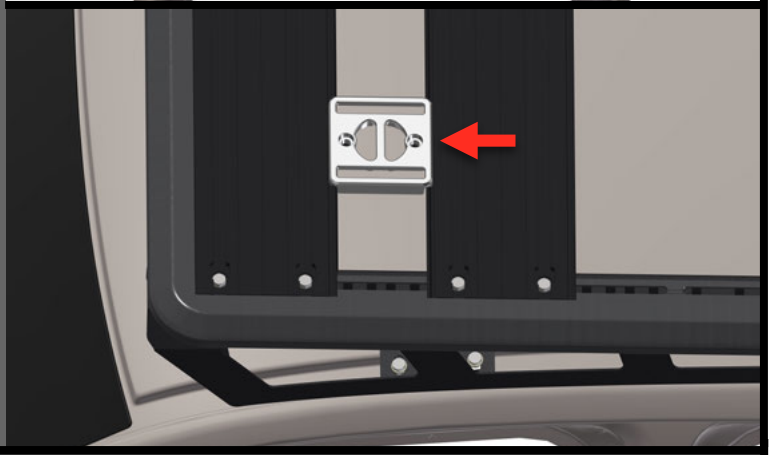

ROOF RACK (Apex) is now fully installed

25

Install PLANKS.

1. Create (8) Bolt & Washer Combos, by adding (1) M8 Wedge-Lock Extended Washer [**C2**] to (1) M8 x 20mm Hex Head Bolt [**B2**].
2. Using (2) Bolt & Washer Combos and (1) M8 Fastening Plate [**E2**] secure the end of each Plank [**A2**]. Place M8 Fastening Plate [**E2**] on underside of top face of Mounting Rail [**A1**] (bottom photo - M8 Fastening Plate in red). Insert each Bolt & Washer Combo through Plank [**A2**], through (1) Rubber Isolator Strip [**D2**] (red arrows), through End Cap [**A6**], through Mounting Rail [**A1**] and into M8 Fastening Plate [**E2**] (top photo). Loosely tighten.
3. Do this for the end of each Plank [**A2**].

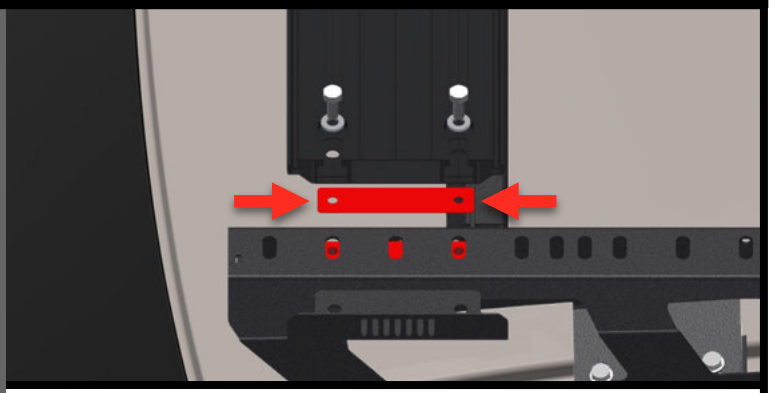

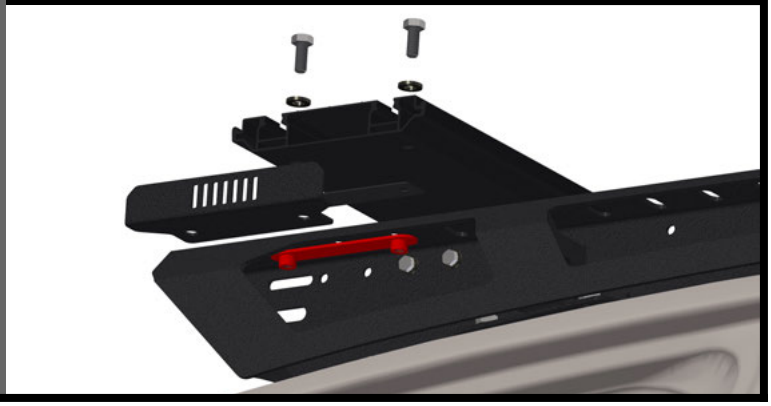

26

Install PLANKS.

* *You can now install your Planks in whatever configuration best meets your needs.*

1. Create (4) Bolt & Washer Combos, by adding (1) M8 Wedge-Lock Extended Washer [**C2**] to (1) M8 x 20mm Hex Head Bolt [**B2**].
2. Using (2) Bolt & Washer Combos and (1) M8 Fastening Plate [**E2**] secure the end of each Plank [**A2**]. Place M8 Fastening Plate [**E2**] on underside of top face of Mounting Rail [**A1**]. Insert each Bolt & Washer Combo through Plank [**A2**], through End Cap [**A6**], through Rubber Isolator Strip [**D2**], through Platform Frame, through Mounting Rail [**A1**] and into M8 Fastening Plate [**E2**] (See Photos from Step 25).
3. Repeat 23.1 and 23.2 for each Plank [**A2**].
4. Tighten all fasteners.

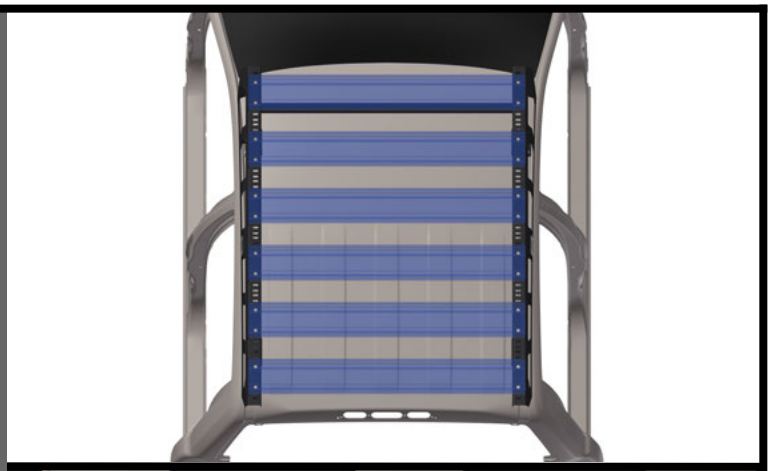

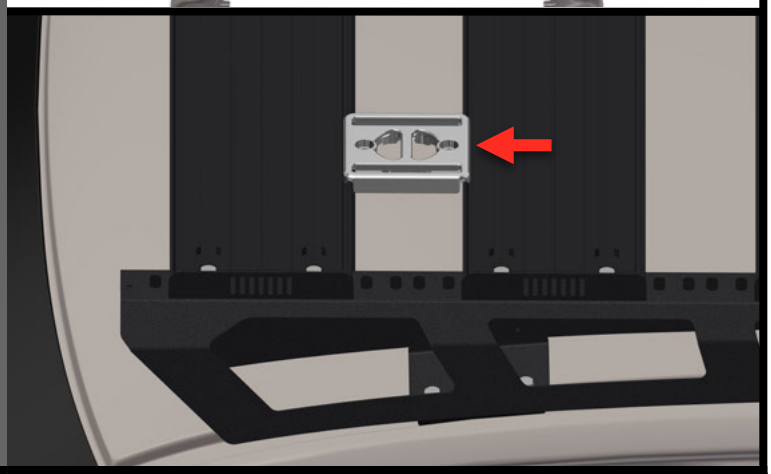

NOTES
Recommended M8 Bolt Torque = 23Nm (Dry) or 18Nm (Anti-Seize).
If you're installing Tie-Down Plates, you can use a Tie-Down (Top) to ensure perfect spacing between each Plank (BOTTOM PHOTO).

P375-P703-AM2G-UP-UR ROOF RACK is now fully installed.

HALF-PLANKS

[START]

1

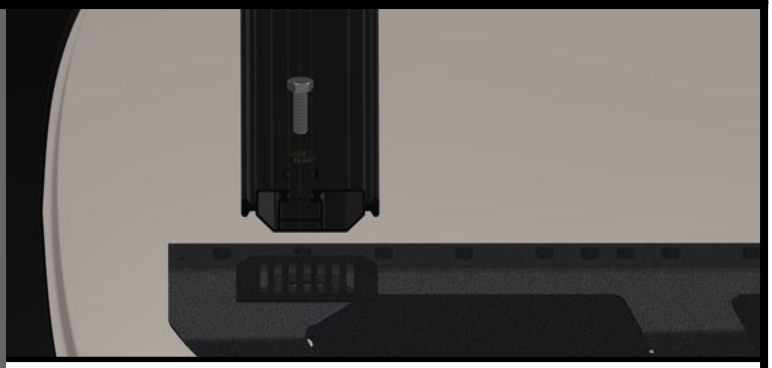

Install HALF-PLANKS

1. Create (2) Bolt & Washer Combos, by adding (1) M8 Wedge-Lock Extended Washer [**C3**] to (1) M8 x 20mm Hex Head Bolt [**B3**].
2. Using (1) Bolt & Washer Combos and (1) M8 Flange Nut (highlighted red)[**E3**] secure the end of each Plank [**A3**]. Place M8 Flange Nut [**E3**] beneath the M8 x 32mm Washer [**D3**] on the underside of top face of Mounting Rail [**A1**] (bottom photo). Insert each Bolt & Washer Combo through Plank [**A3**], through End Cap [**A7**], through Mounting Rail [**A1**], through M8 x 32mm Washer [**D3**] (red arrow) and into M8 Flange Nut [**E3**]. Loosely tighten.
3. Do this for the end of each Plank [**A3**].



2





Half Plank uses

1. Half Planks can be assembled together to function the same as Full Planks or seperate to use with accessories that clamp around more standard roof bars.
2. Compatible with all other Chief Products attachment accessories.

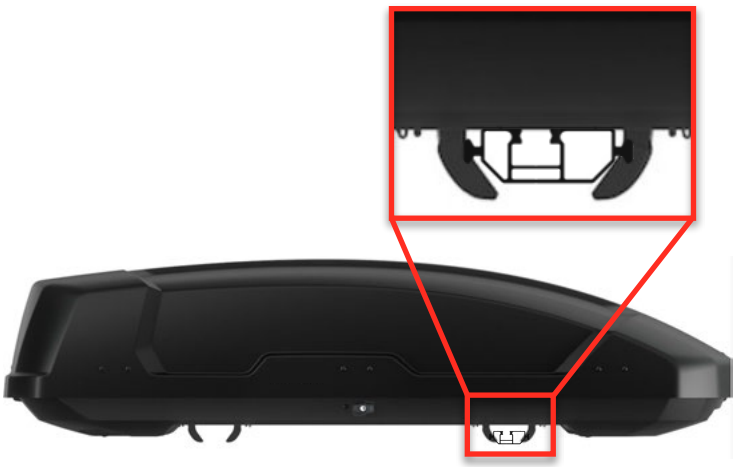

HALF-PLANKS

[END]

TIPS AND TRICKS

1 TIPS AND TRICKS

Removing portions of the weather strips

1. Measure and mark all of the dimensions from steps 5 and 6. Using the mounting feet you can measure and mark the area that needs to be removed. Make sure to protect the vehicle with towels and tape as necessary.
2. Once all measurements have been marked and a check has been made making sure that the mounting rails will fit nicely, lift the weather strip using a plastic separator tool.
3. In the centre of the weather strip should be a metal core. Using a set of cutters, cut through the weather strip. The separator tool will make this easier to avoid damaging the vehicle.
4. Once the core has been cut you can go back with a utility knife to cut out the marked area, using the cutters to cut through the metal core.













1 TIPS AND TRICKS

Drilling into the roof of your vehicle

1. Trace the interior of the mount block onto the roof of the car and mark the points that you are going to drill.
2. Use a punch tool to create a centre punch for the drill.
3. Using a 3/4mm drill bit, drill a pilot hole for the larger drill bit. Using a vacuum here will avoid any metal shavings created while drilling.
4. Create a drill stop on the 11.5mm drill bit as you do not want to damage internal parts of the vehicle.

NOTE
When drilling front most holes there's a chance you will run into a sheet of metal in the channel. To avoid this drill closer to the wall of the channel (3mm) or use a punch after the fact to bend out of the way.

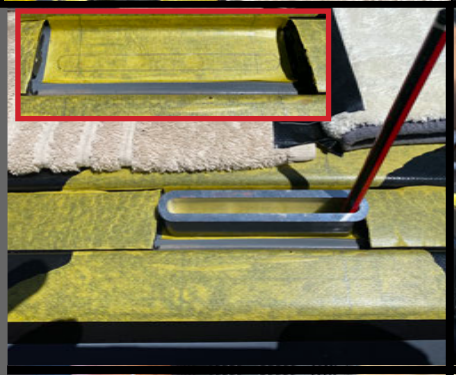







TROUBLESHOOTING

[START]

1 TROUBLESHOOTING

NOISE —> VIBRATIONS (HUMMING SOUND 50-80kph)

1. Check that all Rubber Isolator Strip [**D2**] have been installed properly. They should be positioned between Plank [**A2**] and Platform Frame or End Cap [**A6**].
2. If vibration persists; loosen (without removing) all fasteners retaining Planks [**A2**] and Mounting Rails [**A1**]. Tighten fasteners securing Mounting Rails [**A1**], then tighten fasteners securing Planks [**A2**].

NOTE
Mounting items on your rack will eliminate Plank vibrations.

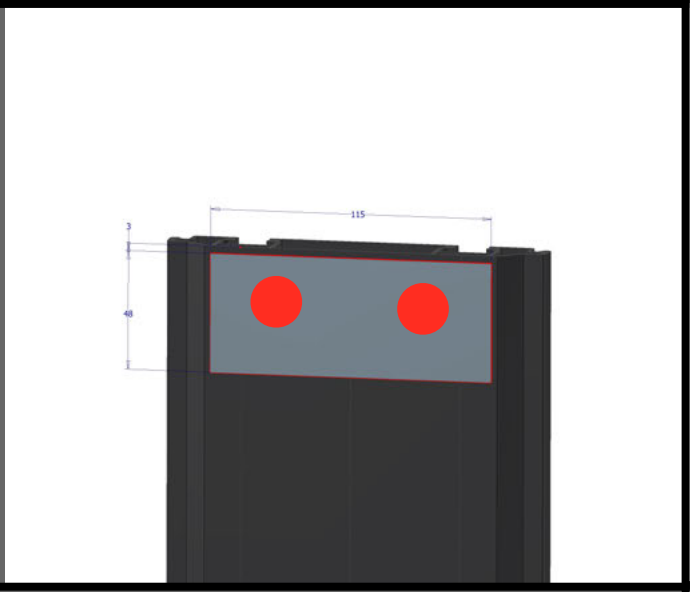

1 TROUBLESHOOTING

NOISE —> WIND (WHISTLING)

1. Check that all End-Caps [**A6**] have been installed properly (Step 23). Open ended Planks can cause whistling noise.

1 TROUBLESHOOTING

SAFARI EDITION NOISE

1. Mounting the planks in the furthest back position while keeping standard plank spacing is the quietest setup for Safari edition users that encounter whistling.

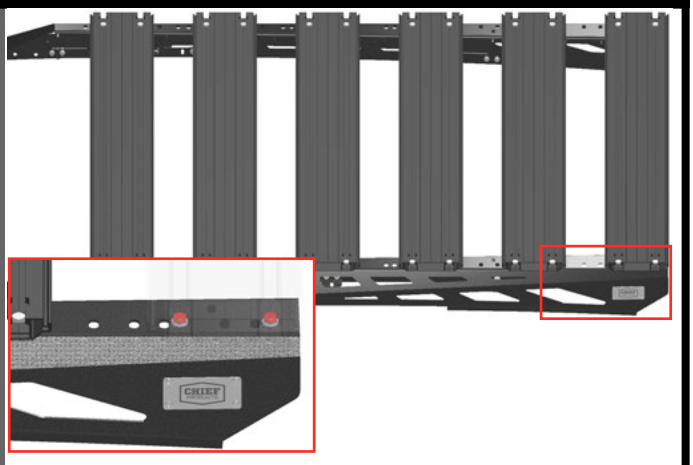

TROUBLESHOOTING

[END]

MAINTENANCE

FASTENERS
- Check fastener tightness regularly and tighten if required. We recommend checking fasteners after every large off-road trip.

CORROSION PROTECTION
- After an off-road trip; rinse all mud, sand or debris off the product.
- After driving in salt water; rinse product thoroughly with fresh water.

EXTRA CARE
- If you're planning to drive in a salty environment; spray fasteners with WD40 or an equivalent.
- If you're planning to drive in a salty environment; spray product with Lanolin or an equivalent.
- Spray deep scratches (before they rust) with touch up paint to help inhibit corrosion.

SUPPORT

Find answers online.
www.chiefproducts.com.au/pages/support

Having troubles? Make sure you've downloaded the most recent version of these instructions from our website. We occasionally make updates.
www.chiefproducts.com.au/installation/p375-p703-am2g-up-ur-roof-rack.pdf

If you need additional help, send us an email.
support@chiefproducts.com.au

SHARE

LOOKING TO SHARE?
Send your photos & videos... unboxing, fully installed, painted in mud, or adventuring in some amazing location. If you share with us, we'll share with our followers.

UPLOAD
www.chiefproducts.com.au/share

EMAIL
connect@chiefproducts.com.au

HASHTAG
#ChiefProducts