# WK2 LOWER FRONT GUARD

## INSTALL INSTRUCTIONS

**REVISION 0**
13 June 2022

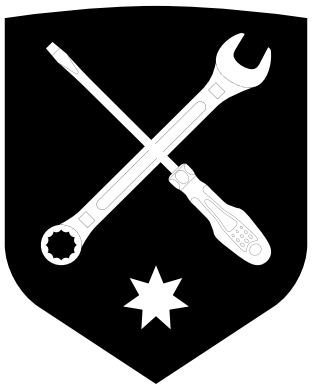

# WK2 LOWER FRONT GUARD

## INSTALL INSTRUCTIONS

| TABEL OF CONTENTS | PAGE |
|---|---|
| WK2 Lower Front Guard BOM's | Pg 3 |
| Removing Vehicle Bumper Fascia | Pg 5 |
| Install WK2 Lower Front Guard | Pg 8 |
| Install KIT - Upper Fascia | Pg 14 |
| Tightening Sequence | Pg 15 |
| Troubleshooting | Pg 18 |

# WK2 Lower Front Guard

Install Instructions

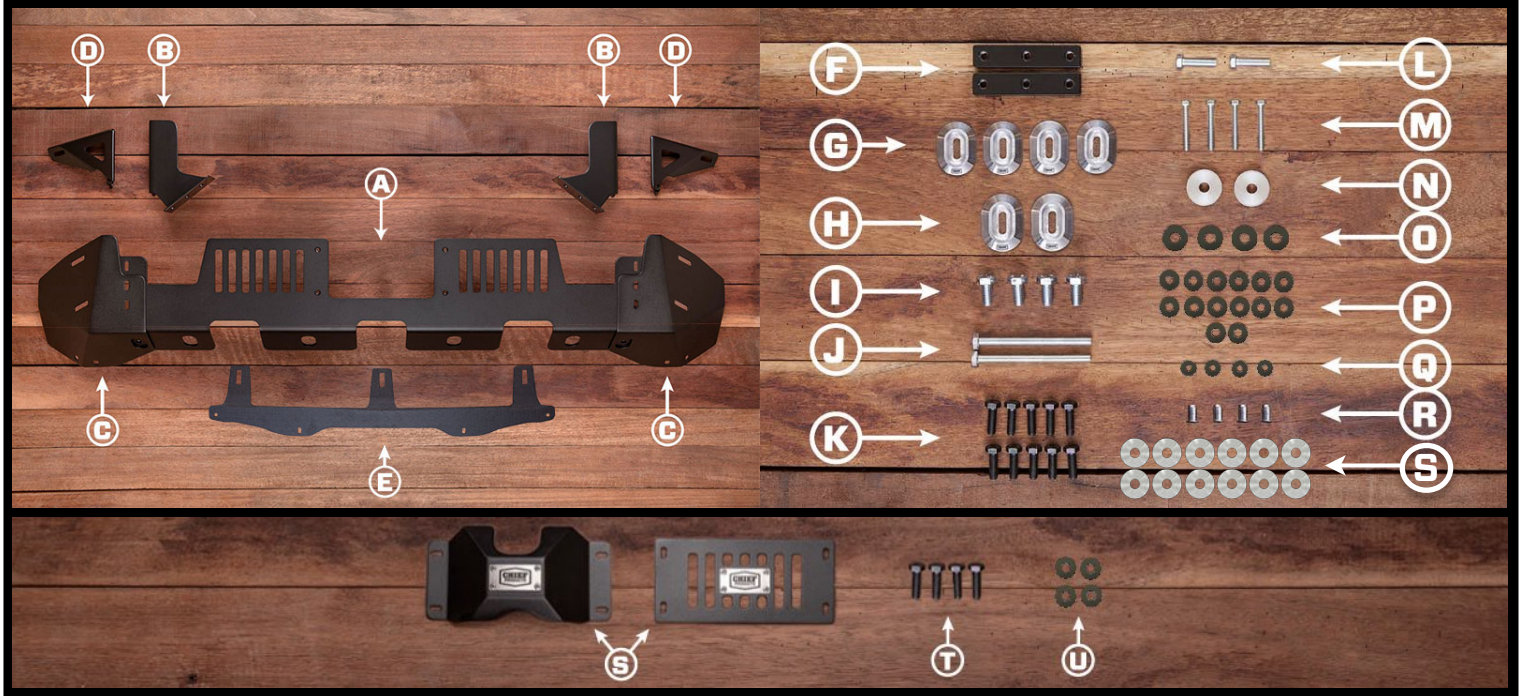


| REF | QTY | DESCRIPTION |
|---|---|---|
| **A** | *1* | Centre Section |
| **B** | *2* | Chassis Mounting Brackets (Left + Right) |
| **C** | *2* | Corner Guards (Left + Right) |
| **D** | *2* | Corner Mounting Brackets (Left + Right) |
| **E** | *1* | Air Dam Reinforcement Bracket (plastic) |
| **F** | *2* | Mounting Blocks |
| **G** | *4* | M6 Bolt Head Protectors (Slotted) |
| **H** | *2* | M8 Bolt Head Protectors (Slotted) |
| **I** | *4* | M10 x 25mm 10.9 Bolts (Zinc) |
| **J** | *2* | M8 x 100mm 10.9 Bolts (Zinc) |
| **K** | *10* | M8 x 25mm 8.8 Bolts (Zinc + Black) |
| **L** | *2* | M8 x 30mm 8.8 Bolts (Zinc) |
| **M** | *4* | M6 x 40mm CL70 Bolts (SS316) |
| **N** | *2* | M8 x 8mm Bushings (AL6061) |
| **O** | *4* | M10 Wedge-Lock Extended Washers (SS316)(BLACK) |
| **P** | *14* | M8 Wedge-Lock Extended Washers (SS316)(BLACK) |
| **Q** | *4* | M6 Wedge-Lock Extended Washers (SS316)(BLACK) |
| **R** | *4* | M6 Nutserts (SS316) |
| **S** | *12* | Washer, 25mm x 9mm x 1.5mm |
| **-** | *1* | 4g Anti-Seize Pouch |
| **-** | *1* | Chief Products Shop Rag |
| | | **INSTALL KITS (Standard Guard or ACC Guard)** |
| **S** | *1* | Centre Guard (Standard or ACC) |
| **T** | *4* | M8 x 25mm 8.8 Bolts (Zinc + Black) |
| **U** | *4* | M8 Wedge-Lock Extended Washers (SS316)(BLACK) |

# WK2 Lower Front Guard (Upper Fascia KIT)

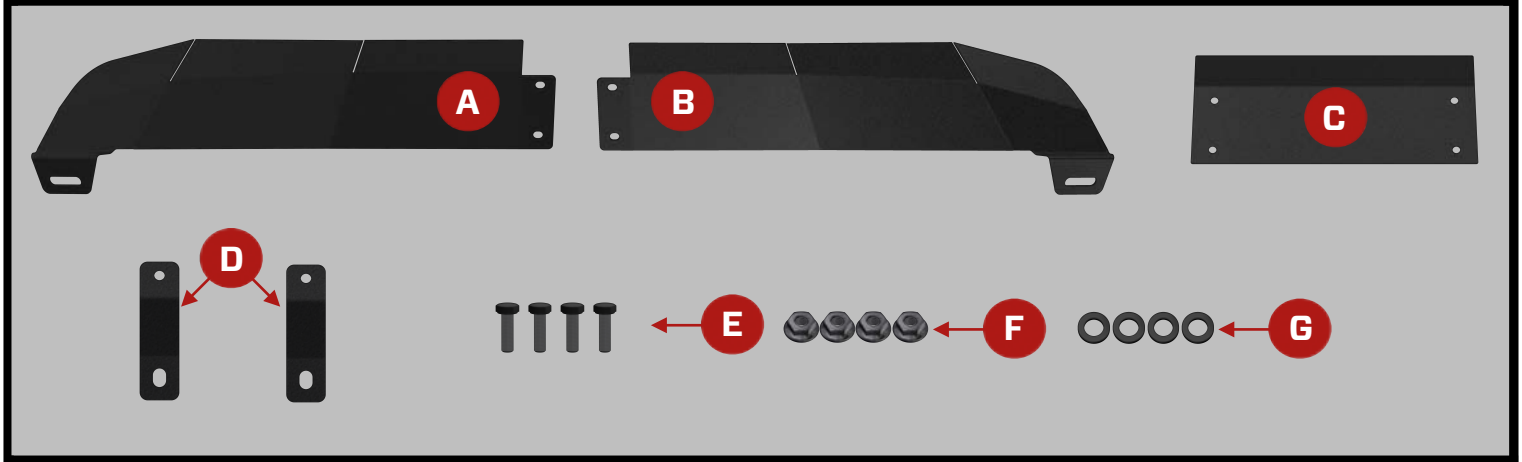


| REF | QTY | DESCRIPTION |
|---|---|---|
| **A** | *1* | Upper Fascia, Outer RH |
| **B** | *2* | Upper Fascia, Outer LH |
| **C** | *2* | Upper Fascia, Centre |
| **D** | *2* | Upper Fascia, Mounting Brackets |
| **E** | *2* | M6 x 20mm CL70 Bolts (SS316)(BLACK) |
| **F** | *4* | M6 Flange CL70 Nuts (SS316)(BLACK) |
| **G** | *14* | M6 Wedge-Lock Standard Washers (SS316)(BLACK) |

>> CONTINUED ON NEXT PAGE >>

# WK2 Lower Front Guard

## Install Instructions

### REQUIRED TOOLS

10mm Socket
13mm Socket
16mm Socket
16mm Wrench
Ratchet & Ratchet Extension
Screwdriver (flat blade)

### TOOLS (FOR OEM TOW HOOKS)

Grinder
Cutting Wheel

### TOOLS (FOR TRIMMING)

Small Reciprocating Saw (Saber Saw)
Smooth Files, Small (Flat & Round)

### NOTES

- **PHOTOS ARE REPRESENTATIVE ONLY.** Photos may show prototype parts, may be taken from multiple vehicles, and may be different than your vehicle. Due to global vehicle variances, model year changes and differing model options (engine, options, etc.) it is impossible to provide photos that are 100% accurate for all customers.
- Do not over-tighten fasteners.
- Product to be installed in conjunction with WK2 Lower Front Guard

### IMPORTANT

- PROPER INSTALLATION IS ESSENTIAL TO THE PERFORMANCE OF THIS PRODUCT.
- ONLY INSTALL THIS PRODUCT ON A 2011-2021 JEEP GRAND CHEROKEE.
- ONLY USE THE PROVIDED HARDWARE FOR INSTALLATION.
- DO NOT MODIFY THE STRUCTURE OF THIS PRODUCT IN ANY WAY.
- CHECK PRODUCT REGULARLY FOR DAMAGE. REPLACE IMMEDIATELY AT FIRST SIGN OF DAMAGE.
- CHECK FASTENER TIGHTNESS REGULARLY AND TIGHTEN IF REQUIRED.
- WK2 LOWER FRONT GUARD (UPPER FASCIA KIT) MUST BE INSTALLED IN CONJUNCTION WITH WK2 LOWER FRONT GUARD.

***START*** *(Next Page)*

>> CONTINUED ON NEXT PAGE >>

# WK2 Lower Front Guard

Install Instructions

## 1

**Remove Lower Fascia.**

1. Remove the lower fascia and set aside. Refer to the Owners Manual for basic instructions.

**NOTE**
This can be a tricky process. If you need some help, we've provided a 'How To' article on our website, (www.chiefproducts.com.au/blogs/how-to/11555201-wk2-lower-front-fascia-removal-installation).




**IF YOU HAVE:**

- OEM Screw-In Hook ***(Go To Step 2)***
- OEM Tow Hooks ***(Go To Step 4)***
- Chief Products WK2 Recovery Point-Hook ***(Go To Step 6)***
- Chief Products WK2 Nudge Bar ***(Go To Step 7)***
- Chief Products WK2 Sump Protection Plate ***(Go To Step 8)***
- NONE OF THE ABOVE ***(Go To Step 9)***

## 2 OEM Screw-In Hook

**Remove OEM Screw-In Hook Threaded Tube.**

Remove 21mm bolt on back of bracket. With the bolt removed, slide the threaded tube out of the bracket. You will now have access to the frame mounting bolts.

**NOTE**
This step is not required for 2013+ WK2s, which have a different bracket, (see Step 3 photo).



## 3 OEM Screw-In Hook

**Remove OEM Screw-In Hook Bracket.**

Remove (2) M10 bolts holding bracket to frame.
The OEM Screw-In Hook Bracket can now be removed.



*SKIP TO STEP 10*

>> CONTINUED ON NEXT PAGE >>

# WK2 Lower Front Guard

Install Instructions

## 4 OEM Tow Hooks

**Remove OEM Tow Hooks.**

1. Remove 30mm Nut from back of OEM Tow Hook.
2. Remove (2) M8 x 65mm Bolts where OEM Tow Hooks are mounted to bumper frame.
3. Do this on both sides (passenger & driver).

* *The OEM Tow Hooks can now be removed.*



## 5 OEM Tow Hooks

**Remove OEM Tow Hook Brackets.**

Remove (2) M10 bolts holding each bracket to frame. The OEM Tow Hook Brackets can now be removed

**NOTE**
Retain M10 bolts, they'll be needed for re-installation.

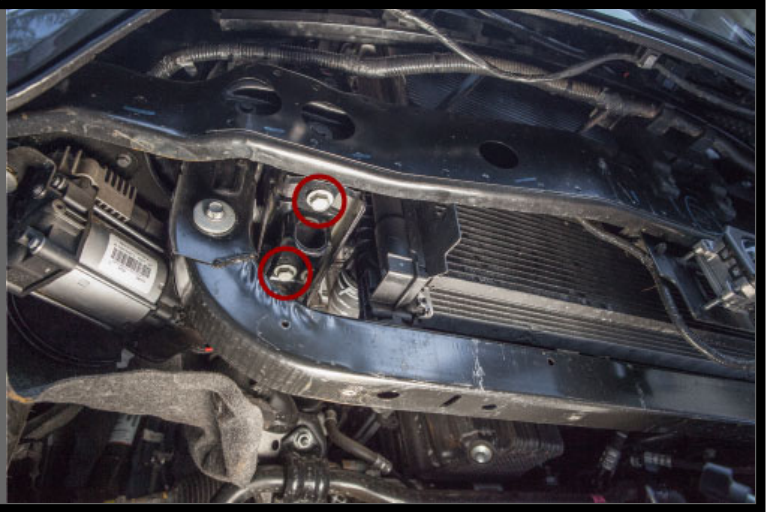

*SKIP TO STEP 10*

## 6 WK2 Recovery Point-Hook

**Remove WK2 Recovery Point-Hook.**

Remove (2) M10 bolts holding the stack (recovery point-hook and mounting plates) to the frame. Set aside.

**NOTE**
Retain M10 bolts, they'll be needed for re-installation.

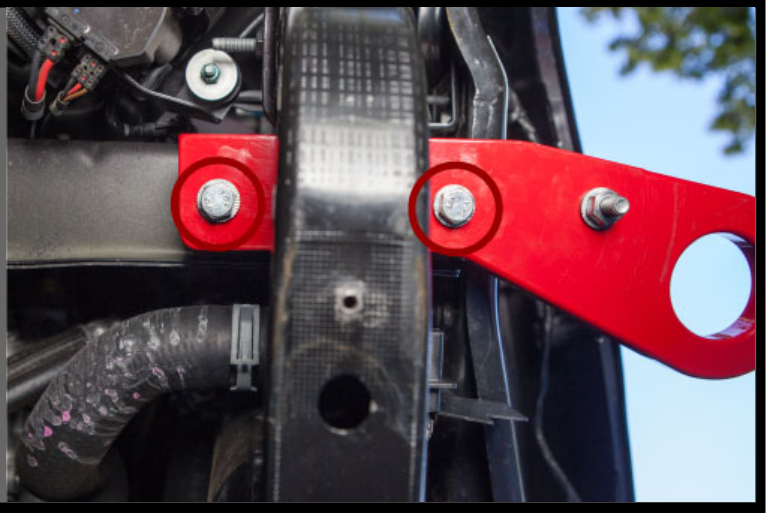

*SKIP TO STEP 10*

>> CONTINUED ON NEXT PAGE >>

# WK2 Lower Front Guard

Install Instructions

## 7 WK2 Nudge Bar

**Remove WK2 Nudge Bar.**

1. Remove the WK2 Nudge Bar Assembly. Set aside.
2. Remove (2) M10 bolts holding the mounting brackets to the frame, (see photo). Set aside.

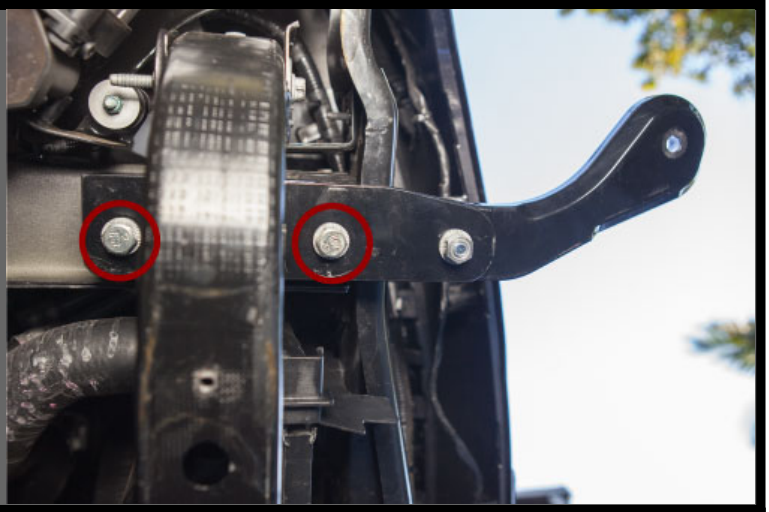

**NOTE**
Retain M10 bolts, they'll be needed for re-installation.

*SKIP TO STEP 10*

## 8 WK2 Sump Protection Plate

**Remove Front Mounting Bolts from WK2 Sump Protection Plate.**

Remove (3) M6 x 40mm bolts, (including M6 Bolt Head Protectors) from front mounting points of WK2 Sump Protection Plate. If you've performed the nutsert upgrade, you'll need to remove a 4th M6 x 40mm Bolt and M6 Bolt Head Protector [blue square].

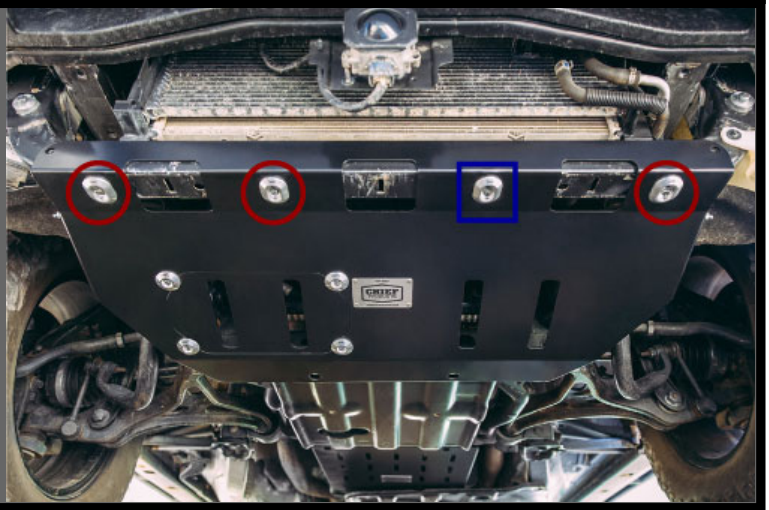

**NOTE**
These bolts are not needed and will be replaced.

*SKIP TO STEP 10*

## 9

**Remove Front Mounting Bolts from OEM Plastic 'Belly Pan'.**

1. Remove (3) M6 bolts from front mounting holes of plastic 'Belly Pan'.
2. Some WK2s also require the removal of a push-in fastener, (blue).

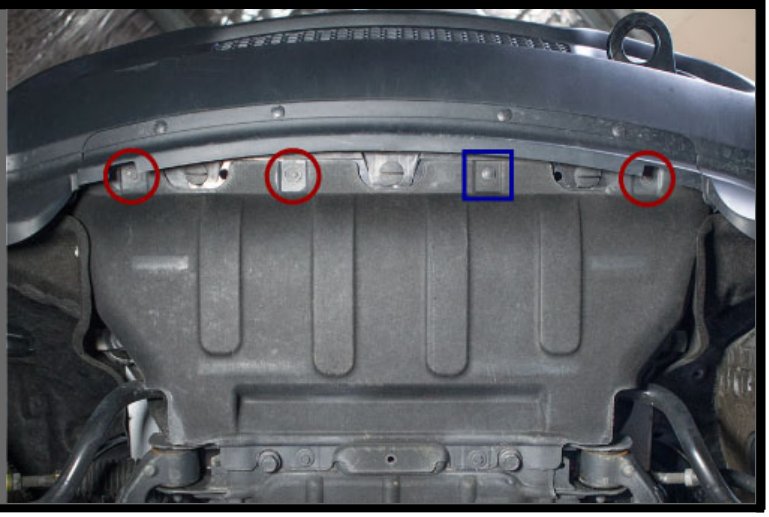

**NOTE**
These bolts are not needed and can be discarded.

>> CONTINUED ON NEXT PAGE >>

# WK2 Lower Front Guard

Install Instructions

## 10 USA Models

**Unbolt plastic 'Corner Guards'.**

1. Remove the bolts holding the plastic Corner Guard to the sub-frame. Do this on both sides.

   * *The OEM Corner Guards can now be removed.*



**NOTE**
These bolts are not needed and can be discarded.

On newer USA Models remove (2) bolts behind the upper facia.

## 11

**Remove M8 Bolts from Sub-frame.**

Remove (2) OEM M8 Bolts from the driver and passenger sides of the sub-frame.



**NOTE**
These bolts are installed with Locktite from the factory so they may be difficult to remove.

## Begin Installation

## 12

**Install Corner Mounting Brackets.**

1. Slide (1) M8 Extended Wedge-Lock Washer [**P**] onto M8 x 100mm Bolt [**J**]. Place M8 x 100mm Bolt [**J**] through slotted hole of Corner Mounting Bracket [**D**] and slide M8 x 8mm Bushing [**N**] onto the end.
2. Insert M8 x 100mm Bolt [**J**] into hole in sub-frame and tighten until semi-tight, (photo - far right).
3. Do this for both sides, (passenger & driver).



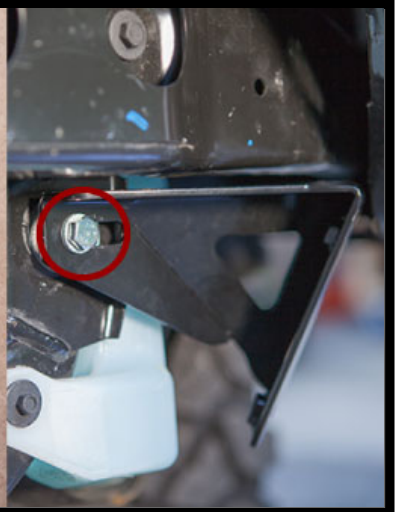

**NOTE**
Make sure you can still move Corner Mounting Bracket [**D**].

On 2011 & 2012 WK2s, it may be necessary to reposition the 'headlight washer hose'. It often fits best on the inside of the tab of the foam 'energy absorber' behind the bumper, (arrow).



>> CONTINUED ON NEXT PAGE >>

# WK2 Lower Front Guard

Install Instructions

**IF YOU HAVE:**

- OEM Tow Hooks ***(Go To Step 13)***
- Chief Products WK2 Recovery Point-Hook ***(Go To Step 15)***
- Chief Products WK2 Nudge Bar ***(Go To Step 16)***
- Chief Products WK2 Nudge Bar + WK2 Recovery Point-Hook ***(Go To Step 17)***
- Chief Products WK2 Hidden Winch Mount ***(Go To Step 18)***
- NONE OF THE ABOVE ***(Go To Step 19)***

## 13 OEM Tow Hooks

**Modify OEM Tow Hook Mounting Brackets.**

The inward facing front tab of the OEM Tow Hook Mounting Bracket must be modified to fit. If you have access to a cutting wheel, this tab can be easily cut (see photo). If not, you can bend the tab downwards using a hammer (difficult). This needs to be done for both brackets (driver & passenger).



## 14 OEM Tow Hooks

**Install Chassis Mounting Brackets.**

1. Place the Chassis Mounting Bracket [**B**] on top of the OEM Tow Hook Mounting Bracket, (diagram shows LH side).
2. Install brackets to the chassis using the OEM bolts. Finger-tight, (photo shows RH side).
3. Do this for both sides, (passenger & driver).

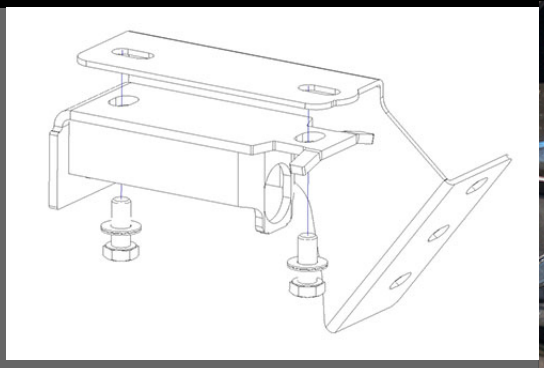

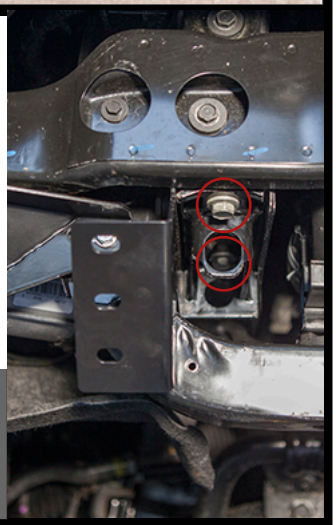

*SKIP TO STEP 20*

**DAD JOKE**

Son: *holding a shovel*
Dad: Careful, that's a groundbreaking invention.

>> CONTINUED ON NEXT PAGE >>

# WK2 Lower Front Guard

Install Instructions

## 15 WK2 Recovery Point-Hook

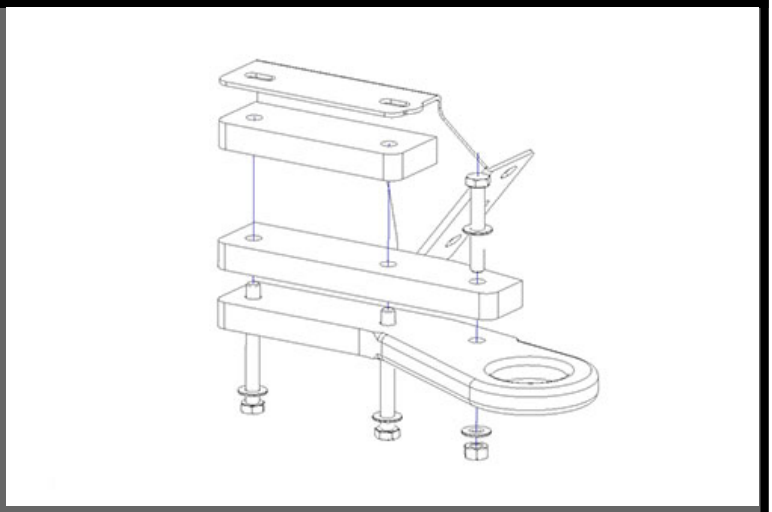

**Install Chassis Mounting Brackets.**

1. Place the Chassis Mounting Bracket [**B**] on top of the WK2 Recovery Hook/Point (and the mounting plates), (see diagram).
2. Holding the entire stack together, place it against the frame and install (finger-tight), re-using your WK2 Recovery Hook/Point install bolts, (M10 x 90mm Bolts & Wedge-Lock Washers).
3. Do this for both sides, (passenger & driver).

**NOTE**
Installing the Strengthening Bolt now, helps hold the stack together during installation and avoids bumper interference installation issues on USA models.

*SKIP TO STEP 20*

## 16 WK2 Nudge Bar

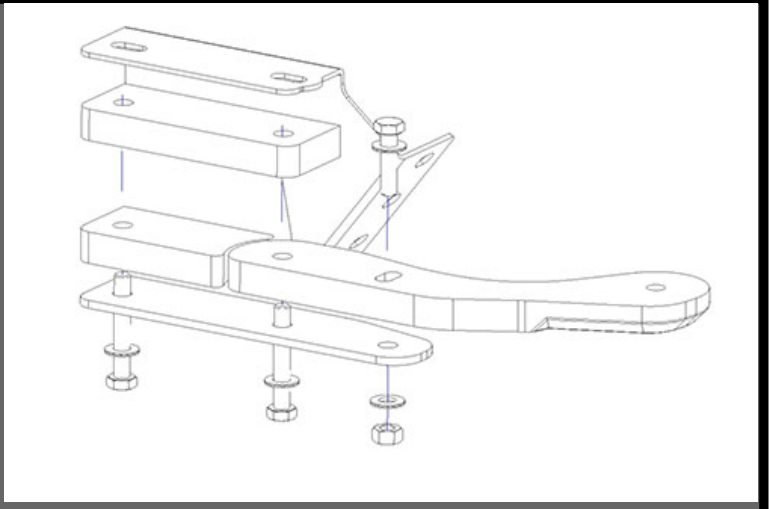

**Install Chassis Mounting Brackets.**

1. Place the Chassis Mounting Bracket [**B**] on top of the WK2 Nudge Bar mounting plates, (see diagram).
2. Holding the entire stack together, place it against the frame and install (finger-tight), re-using your WK2 Nudge Bar chassis mounting bolts.
3. Do this for both sides, (passenger & driver).

**NOTE**
Install the Strengthening Bolt before bolting the stack to the frame, this helps hold the stack together during installation and avoids bumper interference issues on USA models. If you plan to install/remove your lower front fascia regularly, it can be helpful to place the nut on top.

*SKIP TO STEP 20*

## 17 WK2 Nudge Bar + WK2 Recovery Point-Hook

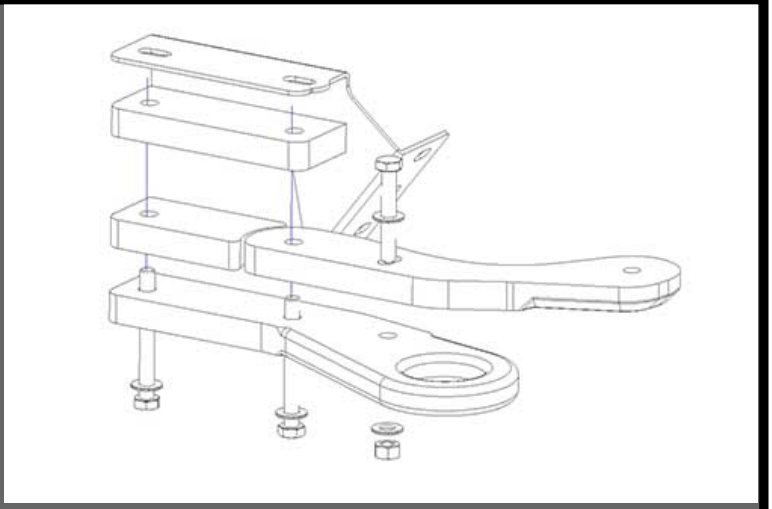

**Install Chassis Mounting Brackets.**

1. Place the Chassis Mounting Bracket [**B**] on top of the WK2 Nudge Bar + WK2 Recovery Point-Hook mounting plates, (see diagram).
2. Holding the entire stack together, place it against the frame and install (finger-tight), re-using your WK2 Recovery Point-Hook chassis mounting bolts.
3. Do this for both sides, (passenger & driver).

**NOTE**
Install the Strengthening Bolt before bolting the stack to the frame, this helps hold the stack together during installation and avoids bumper interference issues on USA models. If you plan to install/remove your lower front fascia regularly, it can be helpful to place the nut on top.

>> CONTINUED ON NEXT PAGE >>

# WK2 Lower Front Guard

Install Instructions

*SKIP TO STEP 20*

## 18 WK2 Hidden Winch Mount

**Install Chassis Mounting Brackets.**

1. Place the Chassis Mounting Bracket [**B**] on top of the WK2 Hidden Winch Mount top plate and Chassis Mounting Bracket, (see diagram).
2. Holding the entire stack together, place it against the frame and install (finger-tight), re-using your WK2 Hidden Winch Mount install bolts, (M10 x 40mm Bolts & Wedge-Lock Washers).
3. Do this for both sides, (passenger & driver).

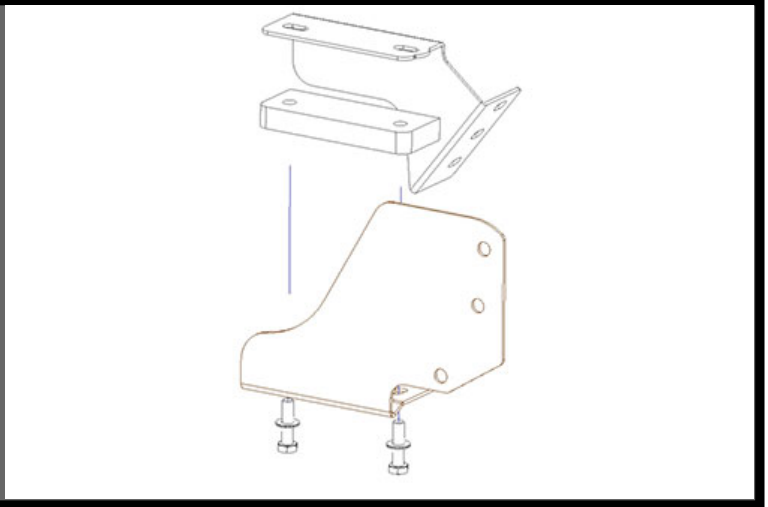

*SKIP TO STEP 20*

## 19

**Install Chassis Mounting Brackets.**

1. Slide (1) M10 Wedge-Lock Extended Washer [**O**] onto each of the (4) M10 x 25mm bolts [**I**].
2. Install (2) Chassis Mounting Brackets [**B**] to the frame using the bolt and washer combos. Finger-tight.
3. Do this for both sides, (passenger & driver).

**NOTE**
If you have a WK2 Sump Protection Plate installed you can access the rear bolts from behind on either side.

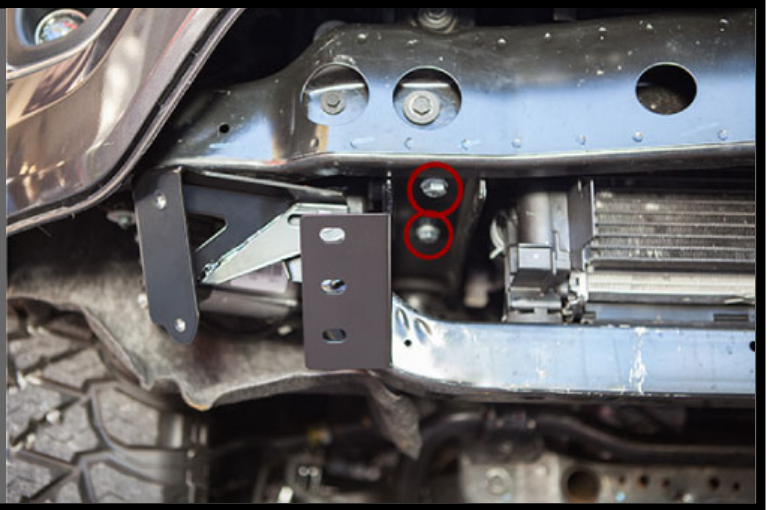

## 20

**Install Centre Section.**

1. Slide (1) M8 Wedge-Lock Extended Washer [**P**] onto each (2) M8 x 25mm bolts [**K**].
2. The Centre Section [**A**] should be installed over top of the WK2 Sump Protection Plate, (if installed).
3. Install the bolt & washer combo through the top mounting slots of the Centre Section [**A**], through the (2) Chassis Mounting Brackets [**B**] into the (2) Mounting Blocks [**F**]. Finger-tight.

**NOTE**
The Centre Section is placed over the WK2 Sump Protection Plate.




>> CONTINUED ON NEXT PAGE >>

# WK2 Lower Front Guard

Install Instructions

## RECOMMENDED INSTALL

The (3) M6 threads in the frame can be easily stripped if the M6 x 40mm Bolts [**N**] are over-tightened. Accidental over-tightening can happen during install or by a mechanic performing a service. For that reason, we've provided (4) M6 Nutserts [**S**] for anyone that wishes to upgrade the mounting points in the frame. The nutserts increase the thread length from 2-3mm to 9-10mm, greatly increasing the strength of the threads. It also provides an opportunity to add a 4th mounting point. Detailed instructions are available here, (www.chiefproducts.com.au/installation/wk2-m6-nutserts.pdf). Please note, installation requires a nutsert tool.

## 21

**Prepare for installation.**

1. Prepare M6 Assembly - Slide (1) M6 Wedge-Lock Washer [**Q**] and (1) M6 Bolt Head Protector [**G**] onto (1) M6 x 40mm Bolt [**M**]. Do this for (4) M6 Bolt Head Protectors.
2. Prepare M8 Assembly - Slide (1) M8 Wedge-Lock Washer [**P**] and (1) M8 Bolt Head Protector [**H**] onto (1) M8 x 30mm Bolt [**L**]. Do this for (2) M8 Bolt Head Protectors.



*IF SUMP PLATE ISN'T PART OF INSTALL SKIP TO STEP 23*

## 22

**Install Spacer Washers**

1. Slide supplied Washers, 25mm x 9mm x 1.5mm **[S]** hardware onto (4) M6 x 40mm Bolt **[M]** underneath (4) M6 Bolt Head Protector **[G].**

*USE (2) WASHERS PER BOLT HEAD PROTECTOR WITH STANDARD AND ACCESS PANEL KIT, USE (3) WITH HEAVY DUTY KIT (shown in image).*

*Note: Sump Plate sits underneath Lower Front Guard.*

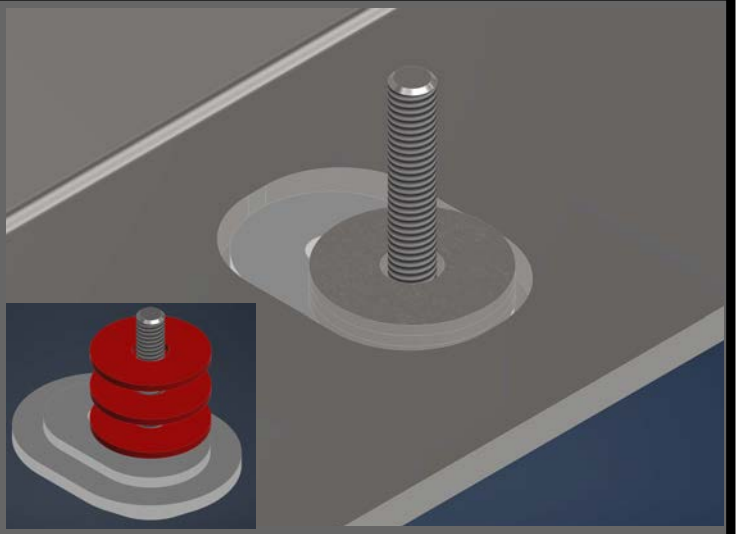

## 23

**Install Centre Section.**

1. Mount Centre Section [**A**] to sub-frame using (3) M6 Assemblies (step 21). Finger-tight. If you've installed a 4th nutsert into the sub-frame, install all (4) M6 Assemblies.

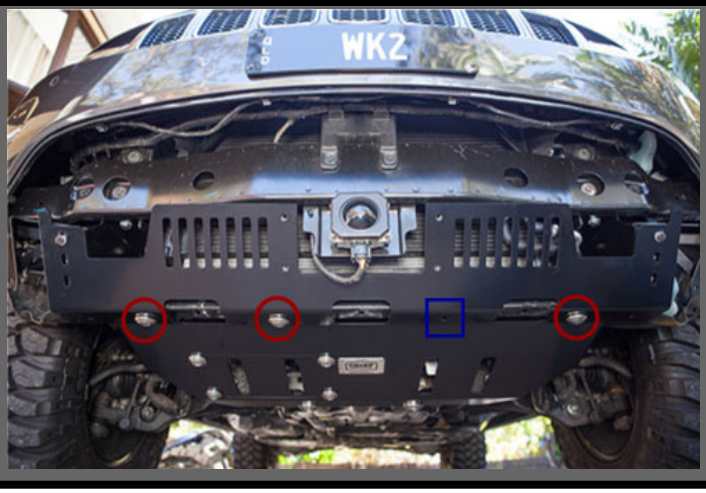


>> CONTINUED ON NEXT PAGE >>

# WK2 Lower Front Guard

Install Instructions

## 24

**Attach Corner Guards to Centre Section.**

1. Slide (1) M8 Wedge-Lock Extended Washer [**P**] onto each (4) M8 x 25mm bolts [**K**].
2. Bolt the Corner Guards [**C**] to the Centre Section [**A**] and the Chassis Mounting Brackets [**B**] using the bolt & washer combos. Finger-tight.
3. Bolt the Corner Guard [**C**] to the bottom of the Centre Section [**A**] using (2) M8 Assemblies (step 21-2). Finger-tight.
4. Do this for both sides, (passenger & driver).




## 25

**Attach Corner Guards to Corner Mounting Brackets.**

1. Slide (1) M8 Wedge-Lock Extended Washer [**P**] onto each (4) M8 x 25mm bolts [**K**].
2. Bolt the (2) Corner Guards [**C**] to the (2) Corner Mounting Brackets [**D**] using the bolt & washer combos. Finger-tight.

**NOTE**
If you are installing an Upper Fascia KIT, leave top (2) bolts for **Step 28**




## 26

**Install Centre Guard (Standard or ACC).**

1. Slide (1) M8 Wedge-Lock Extended Washer [**U**] onto each (4) M8 x 25mm bolts [**T**].
2. Bolt the Centre Guard [**S**] to the Centre Section [**A**] using the bolt & washer combo. Tighten.

**NOTE**
Recommended M8 Bolt Torque = 33Nm (Dry) or 28Nm (Anti-Seize)
If you are installing an Upper Fascia KIT, leave top (2) bolts for **Step 28**



**IF YOU HAVE:**

- Upper Fascia KIT ***(Go To Step 27)***
- NONE OF THE ABOVE ***(Go To Step 30)***

*Note: Summit and S-Limited Bumpers require trimming to fit Upper Fascia. Refer to Trim Instructions.*

>> CONTINUED ON NEXT PAGE >>

# WK2 Lower Front Guard

Install Instructions

## 27

### Assemble Upper Fascia

1. Place the Upper Fascia, Centre [**C**] on top of the Upper Fascia, RH [**A**] and Upper Fascia, LH [**B**]: using (2) M6 x 20mm Bolt [**E**] with M6 Flange Nuts [**F**] and M6 Wedge-Lock Washers [**G**] combo align and fasten components together through the top holes.
2. Align Upper Fascia, Mounting Brackets [**D**] with the bottom holes and fasten with the same hardware combination.

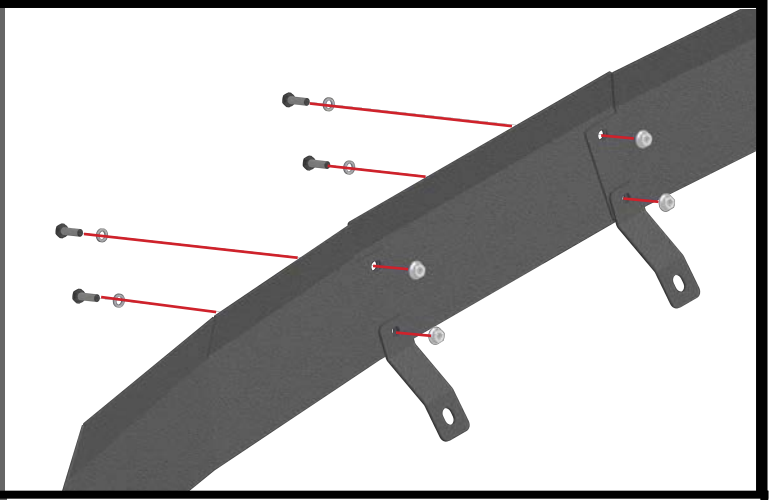

## 28

### Install Upper Fascia Kit

1. Line up Upper Fascia, Mount Brackets [**D**] with the holes circled in blue; then align Upper Fascia, LH & RH [**A**/**B**] holes with those circled in red.
2. Fasten onto vehicle using bolts from WK2 Lower Front Guard **(Step 25 and 26)**.




## Tightening Sequence

## 30

### Adjustment - Standard Guard

1. Push the Centre Section [**A**] back towards the vehicle as far as it will go.
2. Position each Corner Mounting Bracket [**D**] so it sits flush against the back side of each Corner Guard [**C**].

### Adjustment - ACC Guard

1. Push the Centre Section [**A**] back towards the vehicle, leaving a small 5-10mm gap between the ACC Camera and ACC Guard.
2. Position each Corner Mounting Bracket [**D**] so it sits flush against the back side of each Corner Guard [**C**].



>> CONTINUED ON NEXT PAGE >>

# WK2 Lower Front Guard

Install Instructions

## 31

**Tighten Bottom Bolts.**

1. Tighten (3) M6 Assemblies (Step 18-1) along bottom of Centre Section [**A**].
2. Tighten M8 Assemblies (Step 18-2) on bottom of (2) Corner Guards [**C**].

**NOTE**
Recommended M8 Bolt Torque = 33Nm (Dry) or 28Nm (Anti-Seize)
Recommended M6 Bolt Torque = 13Nm (Dry) or 11Nm (Anti-Seize)
Recommended M6 Bolt Torque (with nutsert upgrade) = 19Nm (Dry) or 16Nm (Anti-Seize)




## 32

**Tighten Chassis Bolts.**

Tighten (4) M10 x 20mm Bolts [**I**] holding Chassis Mounting Brackets [**B**] to the frame.

** If you have other products installed to the chassis, tighten those chassis bolts now.*

**NOTE**
Recommended M10 Bolt Torque = 90Nm (Dry) or 74Nm (Anti-Seize).

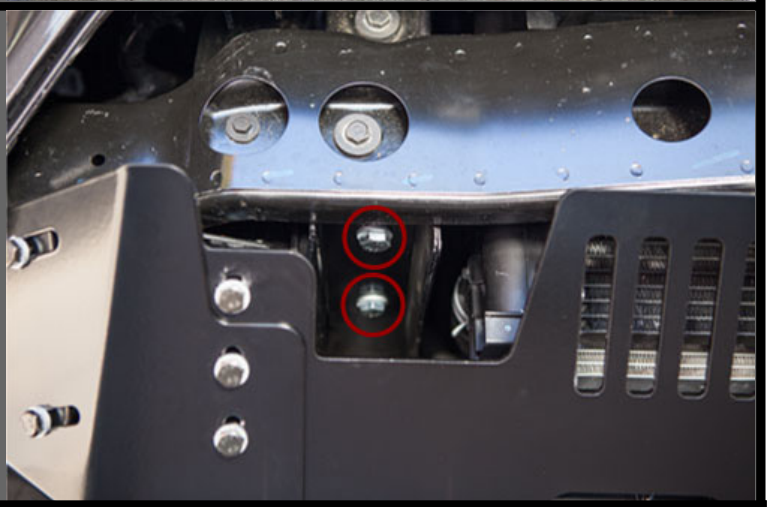

**IF YOU HAVE:**

- OEM Tow Hooks ***(Go To Step 33)***
- NONE OF THE ABOVE ***(Go To Step 34)***

**RECOMMENDED STEP**
Place beer in freezer for later.

>> CONTINUED ON NEXT PAGE >>

# WK2 Lower Front Guard

Install Instructions

## 33 OEM Tow Hooks

**Install OEM Tow Hook.**

1. Slide OEM Tow Hook (**B - side diagram**) into OEM Tow Hook Mounting Bracket (see diagram).
2. Using a cutting wheel, cut (1) M8 x 65mm OEM Bolt to a thread length of 47mm.
3. Install the shortened bolt through the tab on the front of the OEM Tow Hook (**B - side image**) and up into the OEM hardware (**H, G, J & I - side image**). Be sure to install through the tab closest to the Chassis Mounting Bracket [**B**].
4. Install the remaining OEM M8 x 65mm bolt through the remaining tab of the OEM Tow Hook.
5. Tighten both M8 OEM Bolts (**E - side diagram**).
6. Install 30mm Nut at rear of OEM Tow Hook.
7. Do this for both sides, (passenger & driver).

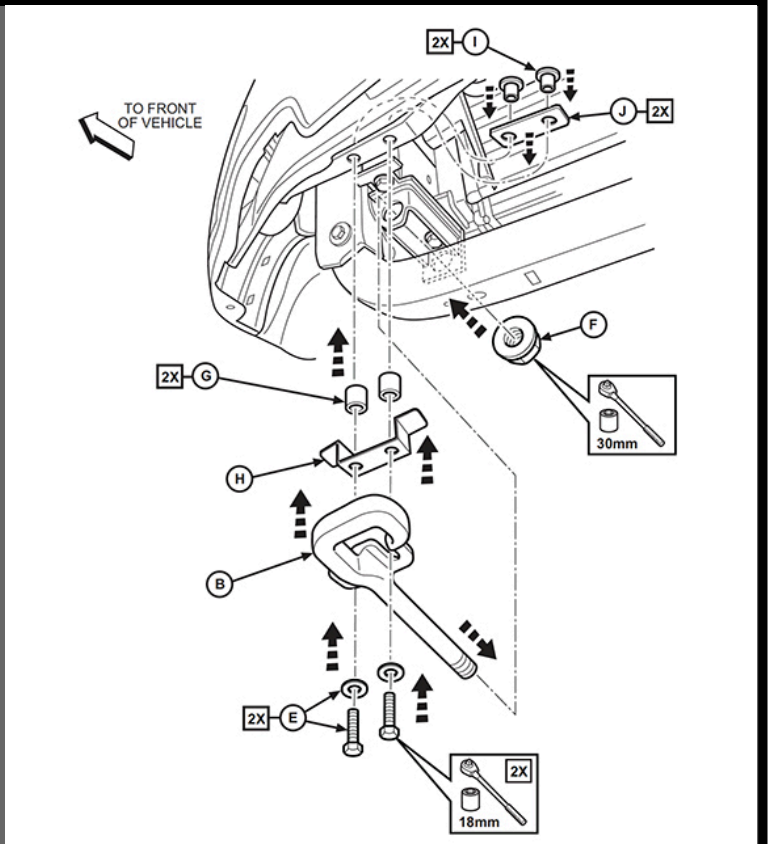


## 34

**Tighten Centre Section Bolts.**

Tighten (6) M8 x 25mm Bolts [**K**] holding Centre Section [**A**] and Corner Guards [**C**] to Chassis Mounting Brackets [**B**].

**NOTE**
Recommended M8 Bolt Torque = 33Nm (Dry) or 28Nm (Anti-Seize)




## 35

**Tighten Corner Guards.**

1. Tighten (2) M8 x 100mm Bolts [**J**] holding Corner Mounting Brackets [**D**] to sub-frame.
2. Tighten (2) M8 x 25mm Bolts [**K**] holding Corner Guards [**C**] to Corner Mounting Brackets [**D**].

**NOTE**
Recommended M8 Bolt Torque = 33Nm (Dry) or 28Nm (Anti-Seize)




>> CONTINUED ON NEXT PAGE >>

# WK2 Lower Front Guard

Install Instructions

We recommend tucking the inner wheel well liners into the back of the Corner Guards [**C**]. In our experience they will stay in position here, but we've provided notches in the back of the Corner Guards if you'd like to bolt them in place.



## 36

**Remove Air Baffle from Lower Fascia.**

Remove the (4) plastic rivets holding the air baffle to the inside of the lower fascia. This can be done using a flat-blade screwdriver, (inset photo).

**NOTE**
The air baffle is not needed and can be discarded.
Retain the plastic rivets, they'll be needed for re-installation.

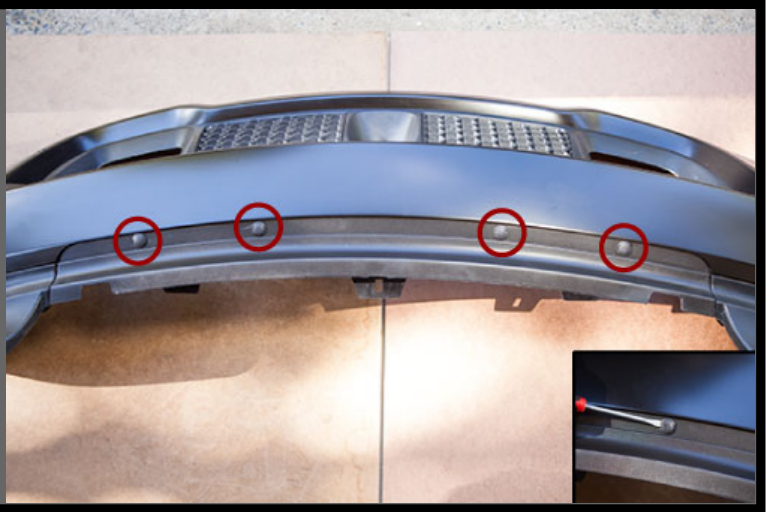

## 37

**Install Air Dam Reinforcement Bracket.**

Install the Air Dam Reinforcement Bracket [**E**] using the (4) plastic rivets.

1. Align holes with lower front fascia and insert lower portion of rivet into each hole.
2. Insert centre portion of rivet to secure.

**NOTE**
To avoid scratches it's helpful to place a towel underneath the lower fascia for this step.



## 38

**Re-Install Lower Front Fascia.**

1. Re-install the lower front fascia. Refer to the Owners Manual for basic instructions.
2. When re-installing the (3) plastic 1/4 turn fasteners to the sub-frame, insert them through the tabs on the Air Dam Reinforcement Bracket [**E**].

**NOTE**
This can be a tricky process. If you need some help, we've provided a 'How To' article on our website, (www.chiefproducts.com.au/blogs/how-to/11555201-wk2-lower-front-fascia-removal-installation).




>> CONTINUED ON NEXT PAGE >>

# WK2 Lower Front Guard

Install Instructions

Once the Lower Front Fascia is installed, re-install the (2) outermost 1/4 turn fasteners. You will have (2) 1/4 turn fasteners remaining. These are not used.



**REMINDER**
Don't forget about the beer in the freezer!

WK2 Lower Front Guard is now fully installed.

## Bumper Fascia Trimming (for Upper Fascia KIT)

For specific vehicles with the Summit/ S-Limited bumpers, trimming is necessary to give clearance for the Upper Fascia installation.

Potential interference areas include:

- Back portion of Vent Bezel (potentially inc. tabs from Vent Grille).
- Lower Grille section.

The images below outline the recommended **trim-line (shown in light blue)** along the bottom of the Bumper Fascia groove where the Bumper Lower Fascia sat prior. A small amount of material at the tabs on the back of both vents also needs to be trimmed.

Complete removal of the Bumper Fascia may be necessary for best cutting practices. It is recommenced to use a Reciprocating Saw (or similar) to trim, then finish edge by sanding.

*Note: Refer to Off-Road Front Bumper install instructions for complete guide to removing whole bumper.*

>> CONTINUED ON NEXT PAGE >>

# WK2 Lower Front Guard (Upper Fascia) Trim Instructions



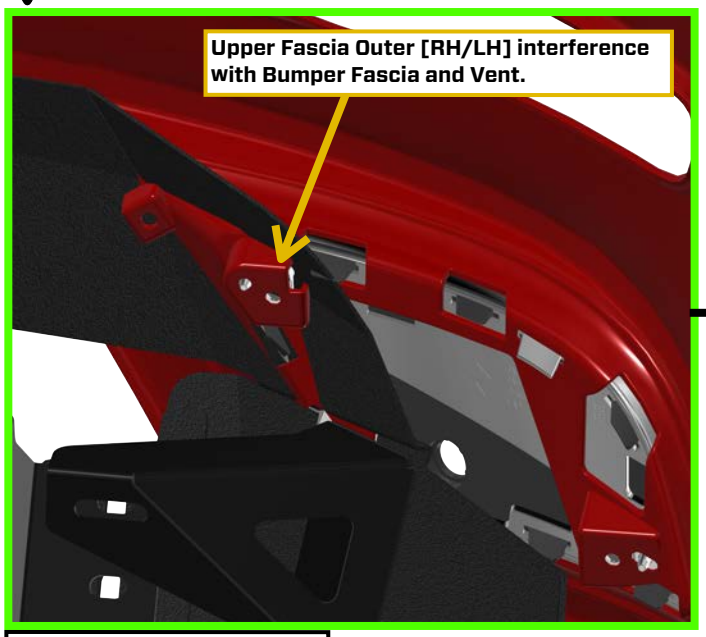


*Note: As viewed from the rear.*

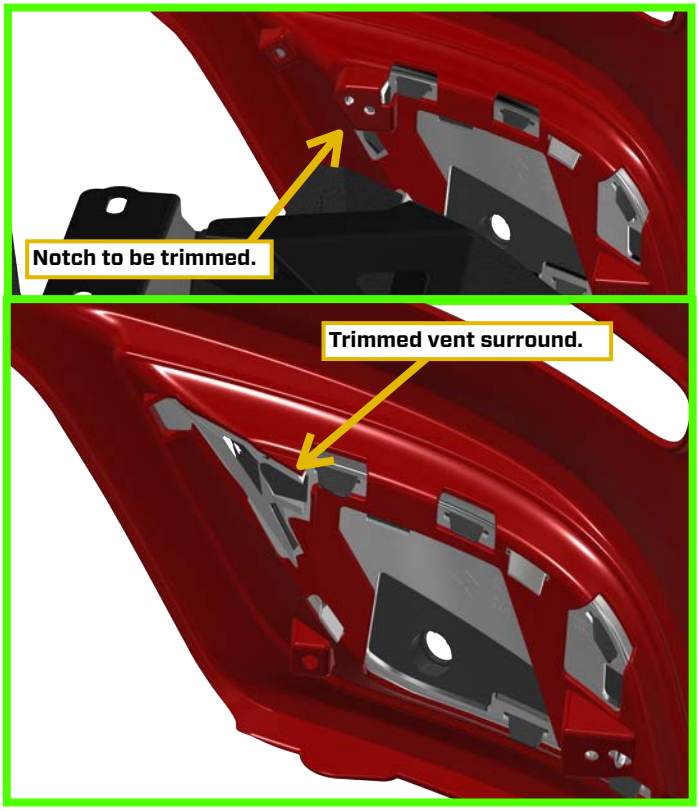


## Trimmed Summit Bumper



>> CONTINUED ON NEXT PAGE >>

# MAINTENANCE

**FASTENERS**
- Check fastener tightness regularly and tighten if required. We recommend checking fasteners after every large off-road trip.

**CORROSION PROTECTION**
- After an off-road trip; rinse all mud, sand or debris off the product.
- After driving in salt water; rinse product thoroughly with fresh water.

**EXTRA CARE**
- If you're planning to drive in a salty environment; spray fasteners with WD40 or an equivalent.
- If you're planning to drive in a salty environment; spray product with Lanolin or an equivalent.
- Spray deep scratches (before they rust) with touch up paint to help inhibit corrosion.

# SUPPORT

**Find answers online.**
www.chiefproducts.com.au/pages/support

**Having troubles? Make sure you've downloaded the most recent version of these instructions from our website. We occasionally make updates.**
www.chiefproducts.com.au/installation/wk2-lower-front-guard.pdf

**If you need additional help, send us an email.**
support@chiefproducts.com.au

# SHARE

**Looking to share epic photos of your WK2?**
Send us your photos - Unboxing, Fully Installed, Painted-In-Mud or out Adventuring in some beautiful location. If you share with us, we'll share with our followers.

**UPLOAD**
www.chiefproducts.com.au/share

**EMAIL**
connect@chiefproducts.com.au

**HASHTAG**
*#ChiefProducts #GrandAdventure*