WK2 OFF-ROAD FRONT BUMPER

INSTALL INSTRUCTIONS

REVISION B
29 August 2022

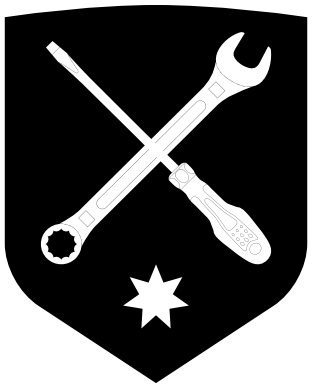

WK2 OFF-ROAD FRONT BUMPER

INSTALL INSTRUCTIONS

TABLE OF CONTENTS	PAGE
PRE-INSTALLATION CHECKLIST	3
BUMPER REMOVAL -- Overland, Laredo and Limited (All Years)	9
BUMPER REMOVAL -- S-Limited, Summit and SRT (All Years)	10
WK2 Winch -- Chassis Mounts (All Years) [Inc. Hooks/Points and/or WK2 Air Suspension KIT]	14
WK2 Winch -- Chassis Mounts Non-Winch [Inc. Hooks/Points and/or WK2 Air Suspension KIT]	19
WK2 Off-Road Front Bumper (ACC Kit)	23
Bumper Fascia Trimming	24
WK2 Off-Road Front Bumper Installation	27
WK2 Off-Road Front Bumper (Number Plate Mount KIT)	27
WK2 Off-Road Front Bumper (Advanced Parking Sensor KIT)	28
Mounting WK2 Off-Road Front Bumper	32
WK2 Off-Road Front Bumper (Apex Grille)	34
WK2 Off-Road Front Bumper (Nomad Grille)	35
Bumper Completion	36
Appendix	37
Troubleshooting	39

VERIFY THAT ALL COMPONENTS HAVE ARRIVED
Box 1 -- WK2 Chassis Mounts (Front)
Box 2 -- WK2 Off-Road Front Bumper “ORFB”
Box 3 -- WK2 Winch Cradle (2011-2015) OR (2016+)
Box 4 -- WK2 Apex Grille (all variants)
Box 5 -- WK2 Nomad Grille
Box 6 -- WK2 Mach II Aero-Bar (all variants)
Box 7 -- WK2 Fusion Fairlead (all variants)
Box 8 -- WK2 ACC KIT
Box 9 -- WK2 Advanced Parking Sensor KIT (all variants)
Box 10 -- WK2 Number Plate Mount KIT (USA & AUS)

WK2 CHASSIS MOUNTS (Front)

BOX 1

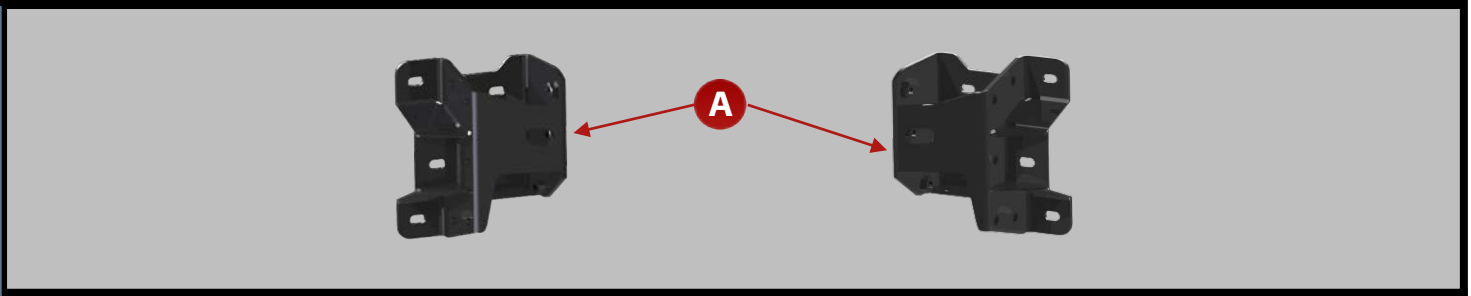

REF	QTY	DESCRIPTION
		WK2 Chassis Mounts
A	*2*	Chassis, Mount Brackets (LH + RH)

WK2 OFF-ROAD FRONT BUMPER "ORFB"

BOX 2

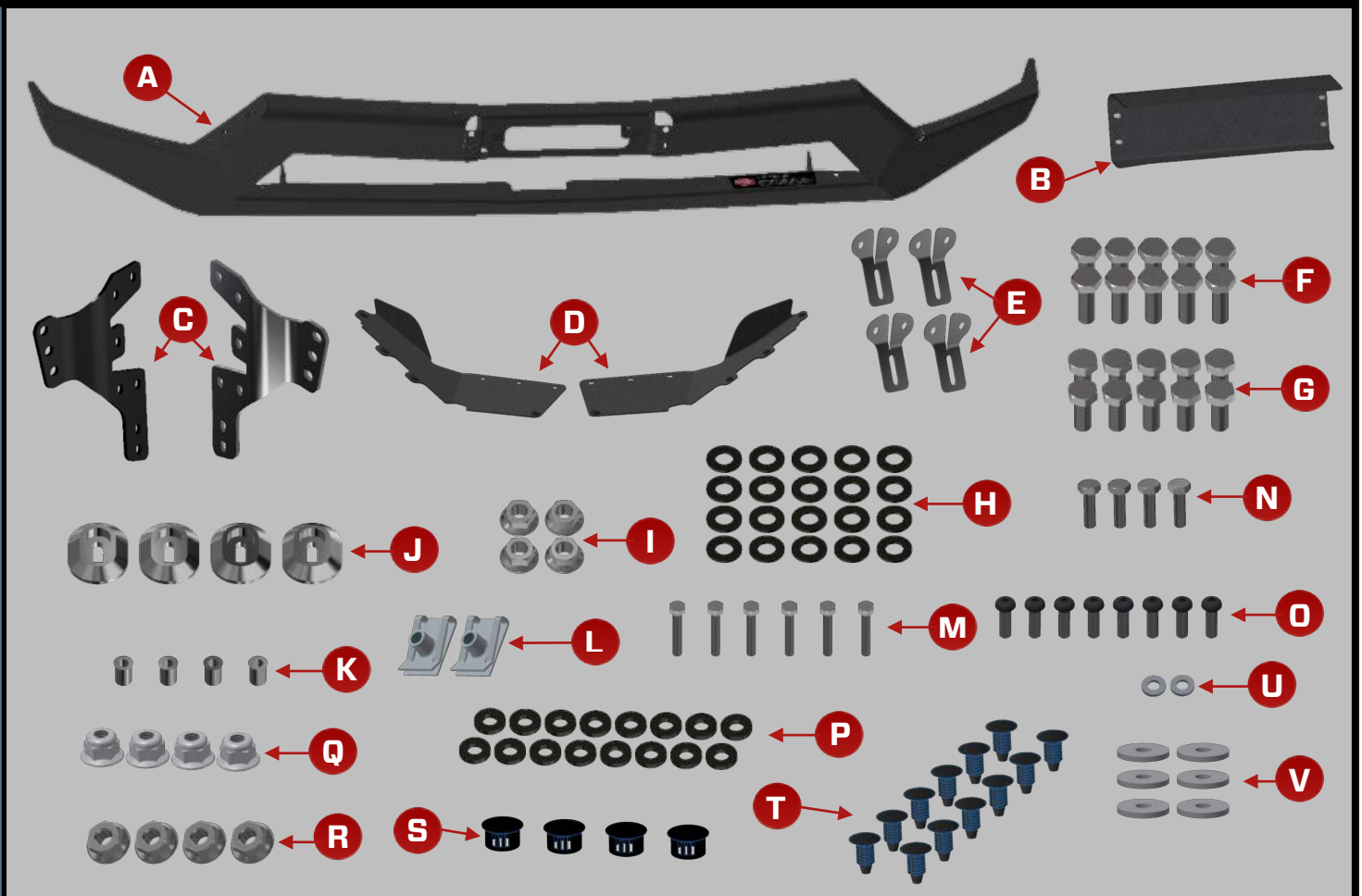

REF	QTY	DESCRIPTION
		WK2 Off-Road Front Bumper "ORFB"
A	1	WK2 Off-Road Front Bumper "ORFB"
B	1	Fairlead Cover
C	2	Bumper Mount (Left + Right)
D	2	Stone Guard (Left + Right)
E	4	Bumper Support
F	10	M10 x 30 Hex Head 10.9 Bolt (Zinc)
G	10	M10 x 25 Hex Head 10.9 Bolt (Zinc)
H	20	M10 Wedge-Lock Extended Washer (SS316, Black)
I	4	M10 CL10 Hex Flange Nut (Zinc)
J	4	M6 Bolt Head Protector, Slotted
K	4	M6 Nutsert, Thinsheet, SS316
L	2	M6 Sheetmetal Nut

REF	QTY	DESCRIPTION
M	6	M6 x 40 Hex Head 10.9 Bolt (Zinc)
N	4	M6 x 20 Hex Head CL70 Bolt (SS316)
O	8	M6 x 20 Socket Button Head CL50 Bolt (SS316, Black)
P	16	M6 Wedge-Lock Extended Washer (SS316, Black)
Q	4	M6 Hex Flange Nylock CL70 Nut (SS316)
R	4	M6 Hex Flange CL70 Nut (SS316)
S	4	Blanking Plug, 14mm Dia
T	12	7.5 x 16mm X-Mas Tree Plug (14mm Head)
U	2	M6 Wedge-Lock Extended Washer (Zinc Flake)
V	6	M8 x 28mm Dia HD Flat Washer (Zinc)
-	2	4g Anti-Seize Pouch
-	1	Chief Products Shop Rag

WK2 WINCH CRADLE [All Variants]

BOX 3

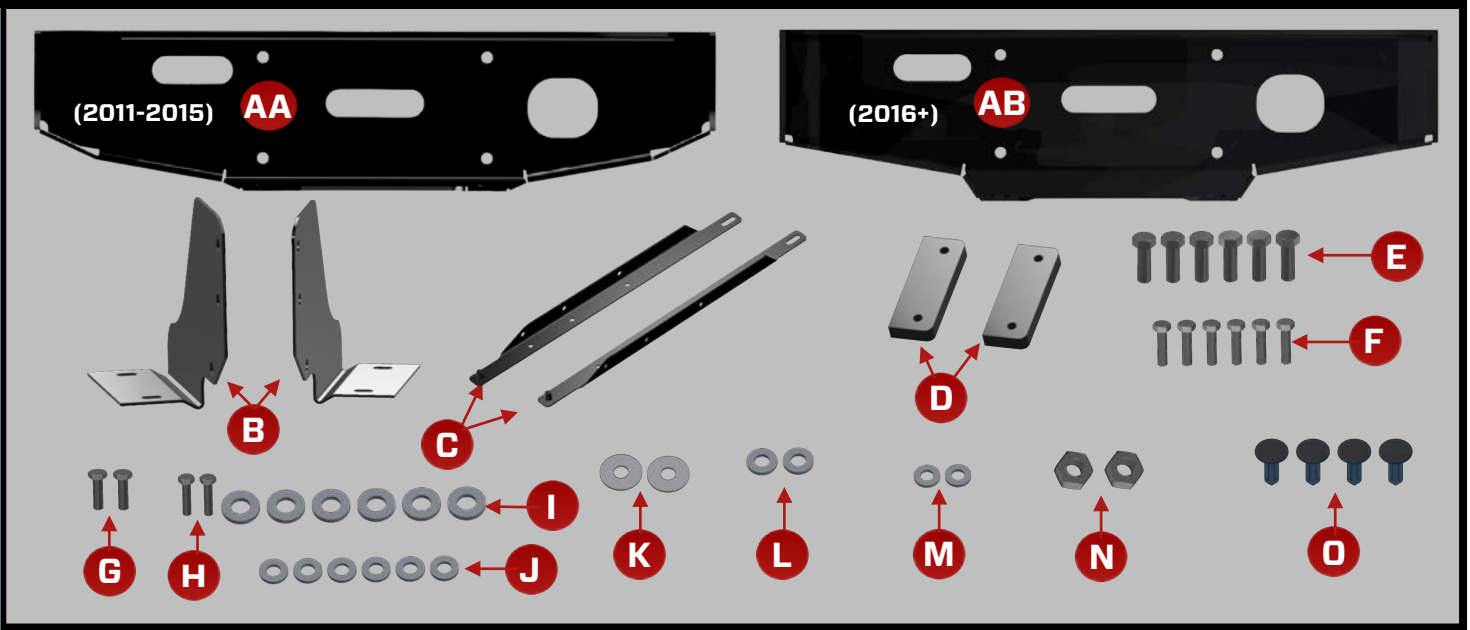

REF	QTY	DESCRIPTION	REF	QTY	DESCRIPTION
		WK2 Winch Cradle			
AA	1	Winch Cradle (2011-2015)	**I**	6	M12 Wedge-Lock Extended Washer (Zinc Flake)
AB	1	Winch Cradle (2016+)	**J**	6	M10 Wedge-Lock Extended Washer (Zinc Flake)
B	2	Chassis Strengthening Plate (Left + Right)	**K**	2	10 x 32mm Dia Flat Washer (Zinc)
C	2	Bonnet Support Strut (Left + Right)	**L**	2	M8 Wedge-Lock Extended Washer (Zinc Flake)
D	2	Top Mounting Plate	**M**	2	M6 Wedge-Lock Extended Washer (Zinc Flake)
E	6	M12 x 35mm Hex Head 10.9 Bolt (Zinc)	**N**	2	M10 Hex CL10 Nut (Zinc)
F	6	M10 x 40mm Hex Head 10.9 Bolt (Zinc)	**O**	4	6.5 x 27mm X-Mas Tree Plug (20.5mm Head)
G	2	M8 x 25mm Hex Head 10.9 Bolt (Zinc)	**-**	1	4g Anti-Seize Pouch
H	2	M6 x 25mm Hex Head 10.9 Bolt (Zinc)			

WK2 OFF-ROAD FRONT BUMPER (APEX GRILLE) [All Variants]

BOX 4

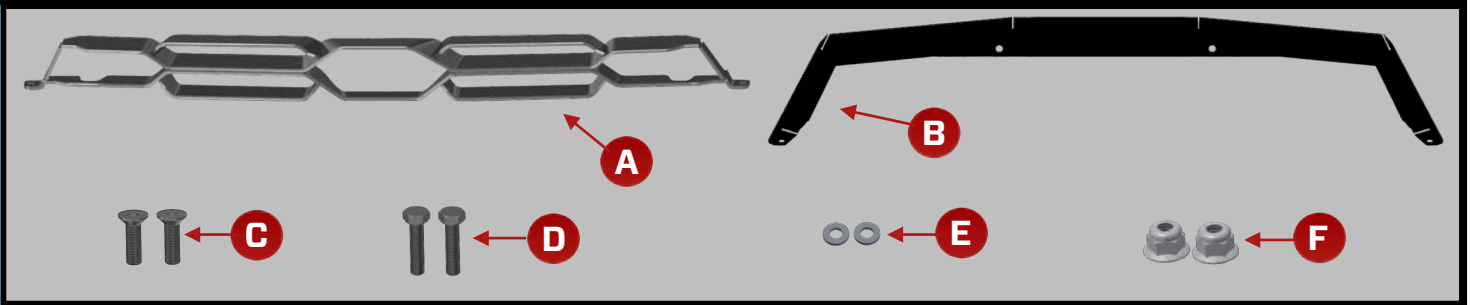

REF	QTY	DESCRIPTION	REF	QTY	DESCRIPTION
		WK2 Off-Road Front Bumper (Apex Grille)			
A	*1*	Apex Grille (Gloss Black or Billet Silver)	**D**	*2*	M6 x 25mm Hex Head Bolt (SS316)
B	*1*	Apex Grille Fascia (Gun Metal)	**E**	*2*	M6 Wedge-Lock Extended Washer (SS316)
C	*2*	M6 x 20mm Countersunk Socket (SS316)	**F**	*2*	M6 Hex Flange Nylock CL70 Nut (SS316)

WK2 OFF-ROAD FRONT BUMPER (NOMAD GRILLE)

BOX 5

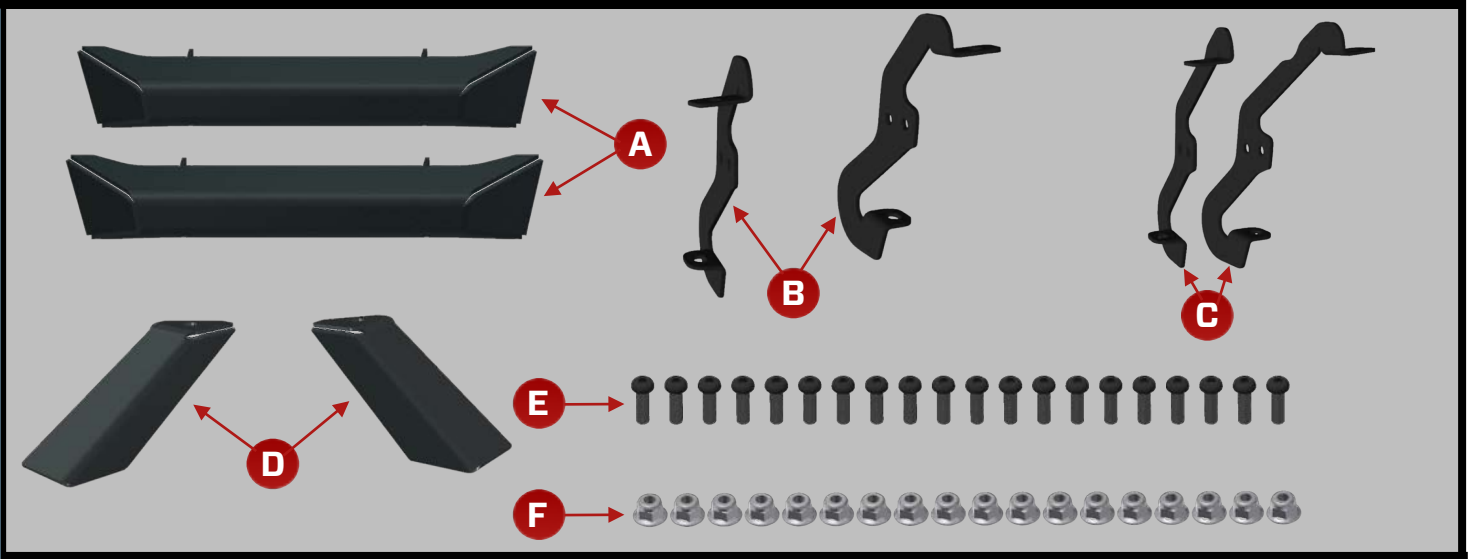

REF	QTY	DESCRIPTION	REF	QTY	DESCRIPTION
		WK2 Off-Road Front Bumper (Nomad Grille)			
A	2	Grille Bar (Gunmetal)	**D**	2	Vent Bar (Gunmetal) (Left + Right)
B	2	Mount, Grille Bar Inner (Left + Right)	**E**	20	M6 x 20mm Socket Button Head CL50 Bolt (SS316, BLACK)
C	2	Mount, Grille Bar Outer (Left + Right)	**F**	18	M6 Hex Flange Nylock CL70 Nut (SS316)

WK2 OFF-ROAD FRONT BUMPER (MACH II AERO-BAR) [All Variants]

BOX 6

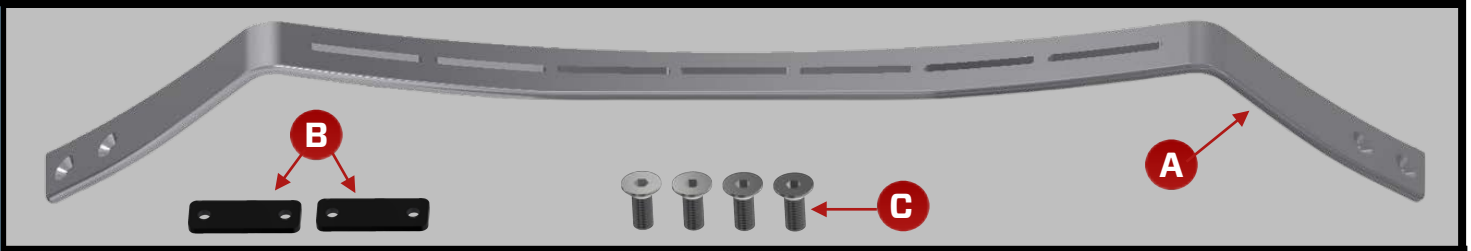

REF	QTY	DESCRIPTION	REF	QTY	DESCRIPTION
		WK2 Off-Road Front Bumper Mach II Aero-Bar			
A	*1*	Mach II Aero-Bar (Gloss Black or Billet Silver)	**C**	*4*	M12 x 30mm Countersunk Socket CL70 (SS316)
B	*2*	M12 Nut Plate			

WK2 OFF-ROAD FRONT BUMPER (FUSION FAIRLEAD) [All Variants]

BOX 7

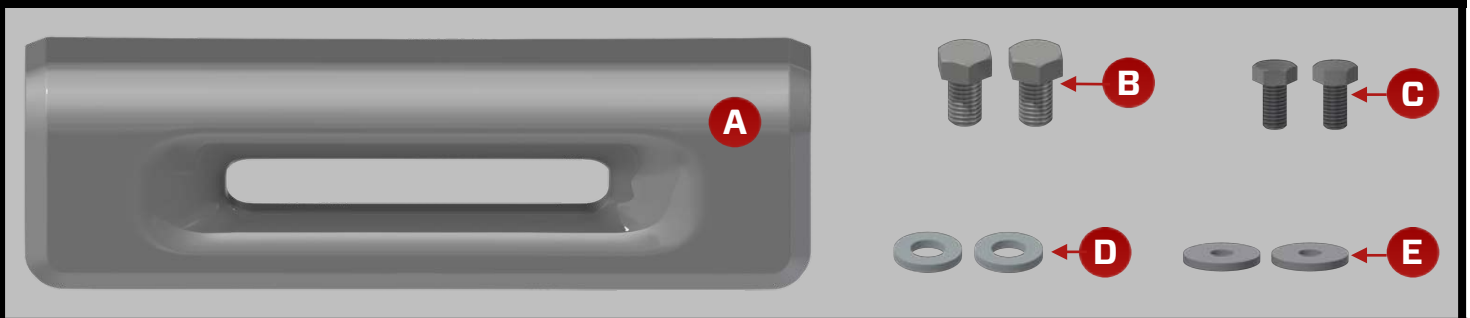

REF	QTY	DESCRIPTION	REF	QTY	DESCRIPTION
		WK2 Off-Road Front Bumper (Fusion Fairlead)			
A	*1*	Fusion Fairlead (Gloss Black, Billet Silver or Gunmetal)	**D**	*2*	M12 Wedge-Lock Extended Washer (Zinc Flake)
B	*2*	M12 x 20mm Hex Head 10.9 Bolt (Zinc)	**E**	*2*	M8 x 28mm Dia HD Flat Washer (Zinc)
C	*2*	M8 x 16mm Hex Head 10.9 Bolt (Zinc)			

WK2 OFF-ROAD FRONT BUMPER (ACC KIT)

BOX 8

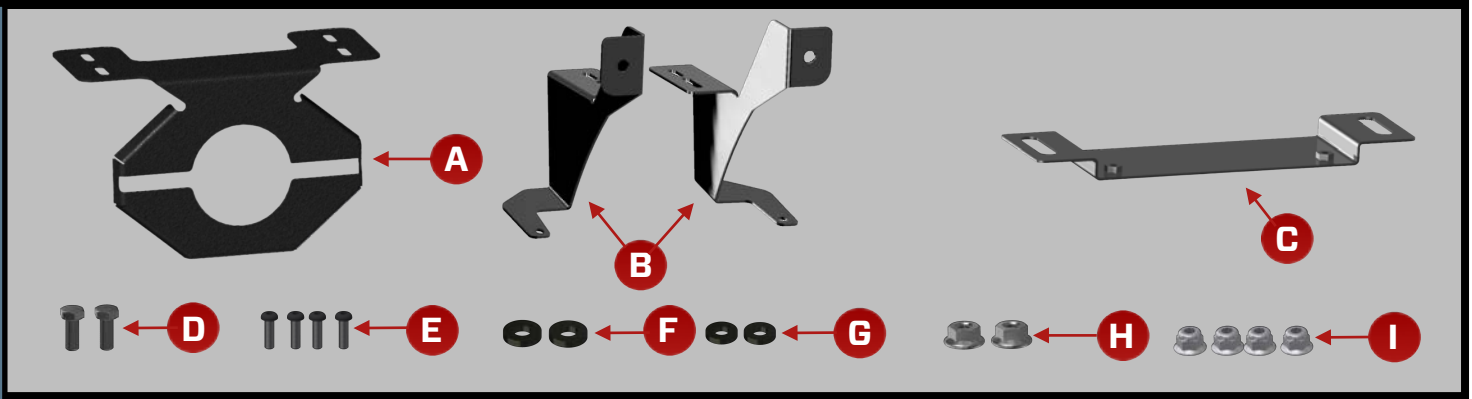

REF	QTY	DESCRIPTION
		WK2 Off-Road Front Bumper (ACC Kit)
A	1	ACC Guard (Textured Black)
B	2	ACC Mount Brackets Non-Winch (Left + Right)
C	1	ACC Mount Bracket Winch
D	2	M10 x 25mm Hex Head 10.9 Bolt (Zinc)
E	4	M6 x 20 Socket Button Head CL50 Bolt (SS316, Black)
F	2	M10 Wedge-Lock Extended Washer (SS316, Black)
G	2	M6 Wedge-Lock Extended Washer (SS316, Black)
H	2	M10 CL10 Hex Flange Nut
I	4	M6 Hex Flange Nylock CL70 Nut (SS316)

WK2 OFF-ROAD FRONT BUMPER (ADVANCED PARKING SENSOR KIT) [All Variants]

BOX 9

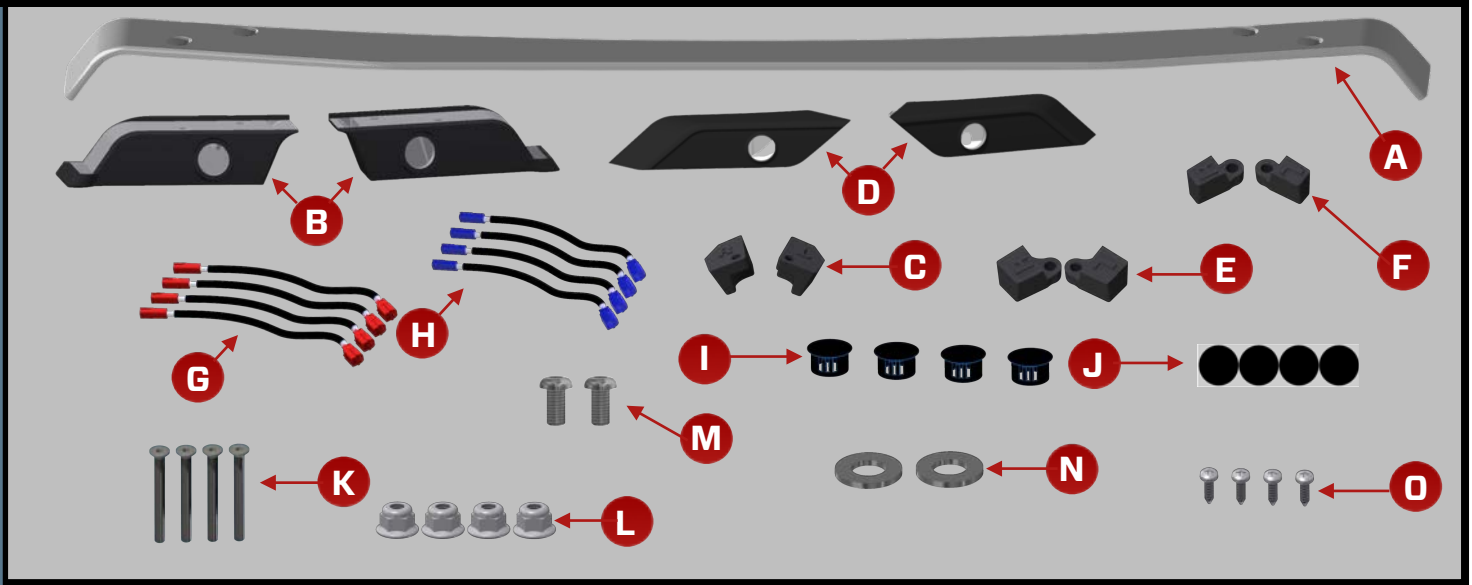

REF	QTY	DESCRIPTION
		WK2 Off-Road Front Bumper (Advanced Parking Sensor Kit)
A	*1*	Sensor Housing Top Bar (Gloss Black or Billet Silver)
B	*2*	Sensor Housing Inner (Left + Right)
C	*2*	Sensor Retainer Inner (Left + Right)
D	*2*	Sensor Housing Outer (Left + Right)
E	*2*	Sensor Retainer Outer *Large* (Left + Right)
F	*2*	Sensor Retainer Outer *Small* (Left + Right)
G	*4*	Sensor Harness Extensions (VATT-21-010)
H	*4*	Sensor Harness Extensions (VATT-21-011)
I	*4*	Blanking Plug 20mm Dia Head
J	*1*	Sensor Sticker Sheet
K	*4*	M6 x 60mm Countersunk Socket (SS316)
L	*4*	M6 Hex Flange Nylock CL70 Nut (SS316)
M	*2*	M6 x 12mm Button Head Socket (SS316)
N	*2*	M6 Flat Washer (SS316)
O	*4*	3.5mm (6G) x 13mm Screw, Self Tapping (Zinc)

WK2 OFF-ROAD FRONT BUMPER (NUMBER PLATE MOUNT KIT - USA)

BOX 10

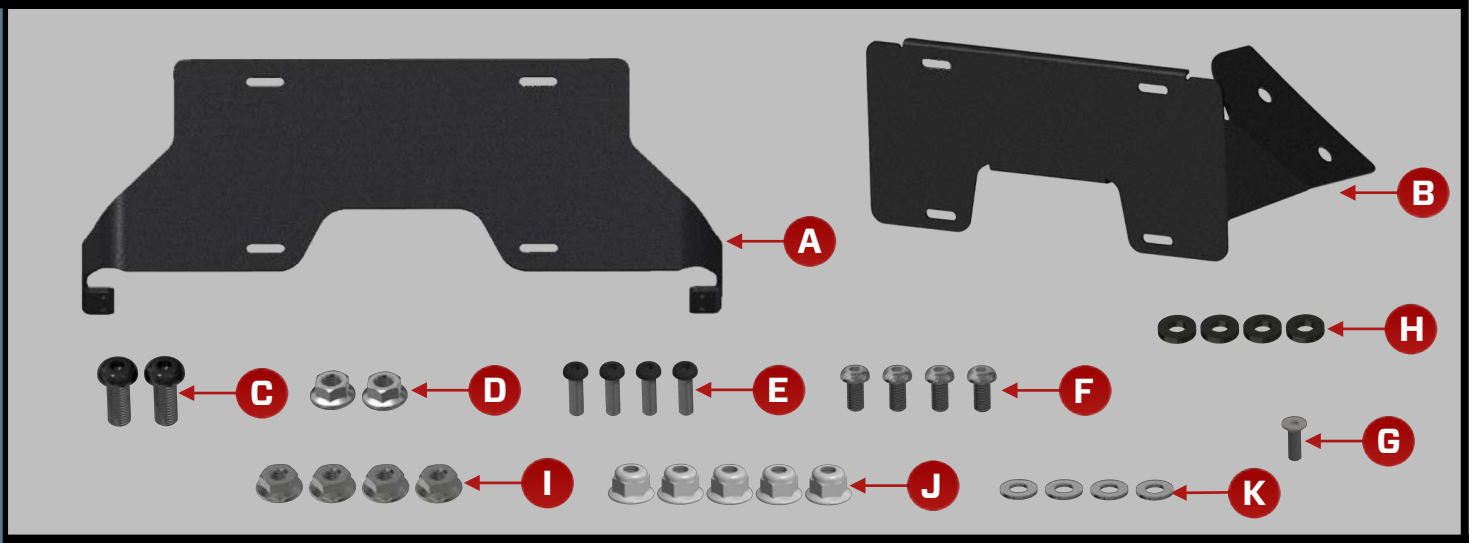

REF	QTY	DESCRIPTION	REF	QTY	DESCRIPTION
		WK2 Off-Road Front Bumper (Number Plate Mount Kit USA)			
A	1	Centre Plate - USA	**G**	1	M6 x 20mm Countersunk Socket (SS316)
B	1	Side Plate - USA	**H**	4	M6 Wedge-Lock Extended Washer (SS316, Black)
C	2	M10 x 25mm Socket Button Head CL70 Bolt (SS316, Black)	**I**	4	M6 Hex Flange CL70 Nut (SS316)
D	2	M10 CL10 Hex Flange Nut	**J**	5	M6 Hex Flange Nylock CL70 Nut (SS316)
E	4	M6 x 20mm Socket Button Head CL50 Bolt (SS316, Black)	**K**	4	M6 Flat Washer (SS316)
F	4	M6 x 12mm Socket Button Head CL50 Bolt (SS316)			

WK2 OFF-ROAD FRONT BUMPER (NUMBER PLATE MOUNT KIT - AUS)

BOX 10

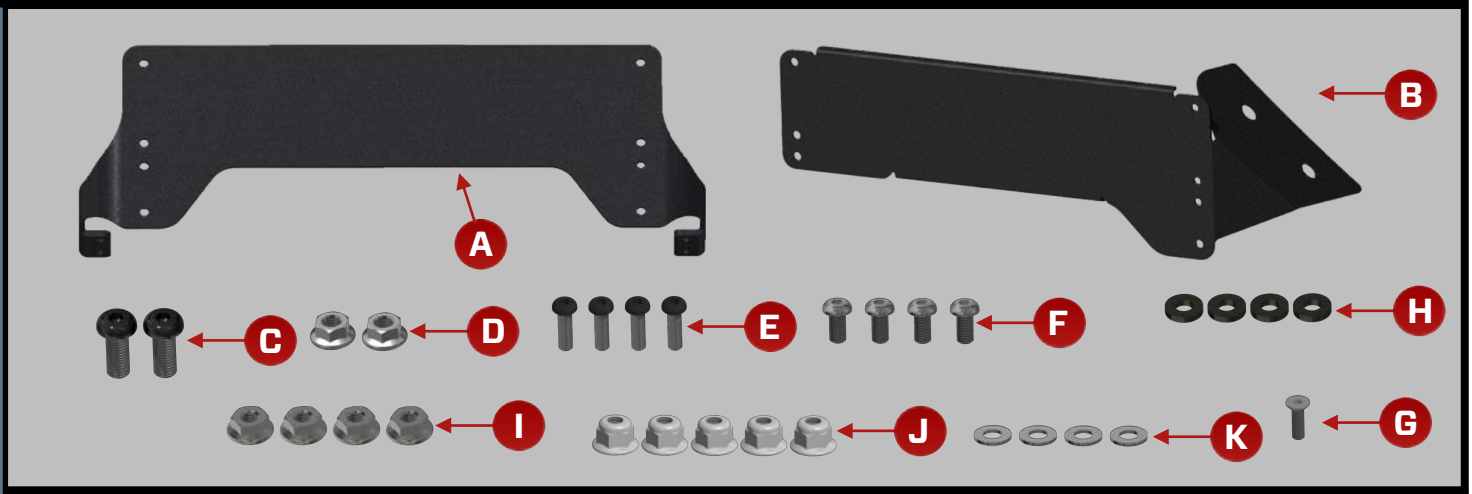

REF	QTY	DESCRIPTION	REF	QTY	DESCRIPTION
		WK2 Off-Road Front Bumper (Number Plate Mount Kit AUS)			
A	1	Centre Plate - AUS	**G**	1	M6 x 20mm Countersunk Socket (SS316)
B	1	Side Plate - AUS	**H**	4	M6 Wedge-Lock Extended Washer (SS316, Black)
C	2	M10 x 25mm Socket Button Head CL70 Bolt (SS316, Black)	**I**	4	M5 Hex Flange CL70 Nut (SS316)
D	2	M10 CL10 Hex Flange Nut	**J**	5	M6 Hex Flange Nylock CL70 Nut (SS316)
E	4	M6 x 20mm Socket Button Head CL50 Bolt (SS316, Black)	**K**	4	M5 Flat Washer (SS316)
F	4	M5 x 12mm Socket Button Head CL50 Bolt (SS316)			

COMPATIBLE PRODUCTS

These install instructions will include instructions for the following compatible products:

- WK2 Recovery Point
- WK2 Recovery Hook
- WK2 Sump Protection Plate

REQUIRED TOOLS

Tape Measure	Ruler (150mm Minimum)
Felt Tip Marking Pen	Small reciprocating Saw (Saber Saw)
Tape	Smooth Files, Small (Flat & Round)
Utility Knife	Screwdriver (flat blade)
Punch Tool	1/2" (3/8") Drive Extension
1/2" (3/8") Drive Ratchet	13mm Socket
10mm Socket	18mm Socket
16mm Socket	13mm Combination Spanner
10mm Combination Spanner	18mm Combination Spanner
16mm Combination Spanner	H8 Hex Key
H4 Hex Key	

NOTES

- Left and Right are defined from the drivers perspective.
- All fasteners to be installed using supplied "Anti-Seize" for best performance.
- Do not over-tighten fasteners.
- Photos are representative only. They may show prototype parts and be taken from multiple vehicles.

HELPFUL TIPS

- Final tightening of fasteners is best done after fitting all the components into place and gradually tightening to achieve the best fit.
- Use of the supplied anti-seize will prevent fasteners from becoming seized and ensure ease of disassembly in future.
- Due to the modular nature of the WK2 Off-Road Front Bumper, the installation steps vary accordingly. Pay attention to the prompts in the blue boxes for guidance.
- It is recommended a second person assist when handling the vehicle Bumper Fascia and/or the ORFB.

IMPORTANT

- PROPER INSTALLATION IS ESSENTIAL TO THE PERFORMANCE OF THIS PRODUCT.
- ONLY INSTALL THIS PRODUCT ON A 2011-2021 JEEP GRAND CHEROKEE.
- ONLY USE THE PROVIDED HARDWARE FOR INSTALLATION.
- DO NOT MODIFY THE STRUCTURE OF THIS PRODUCT IN ANY WAY.
- CHECK PRODUCT REGULARLY FOR DAMAGE. REPLACE IMMEDIATELY AT FIRST SIGN OF DAMAGE.
- CHECK FASTENER TIGHTNESS REGULARLY AND TIGHTEN IF REQUIRED.

INSTALLATION START

1

Remove Lower Fascia

1. Remove the lower fascia and set aside. Refer to the Owners Manual for basic instructions.

NOTE: This can be a tricky process. If you need some help, we've provided a 'How To' article on our website, (www.chiefproducts.com.au/blogs/how-to/11555201-wk2-lower-front-fascia-removal-installation).



2

Detach Fender Flare Fasteners

1. Remove (1) M6 Bolt on each side, (drivers & passengers).
2. Remove (2) Plastic Rivets with punch tool on each side, (drivers & passengers).
3. Remove (2) plastic push fasteners on each side, (drivers & passengers).

NOTE: It might be easier to turn the wheel so that it points inwards.



3

Disconnect Fender Flares

1. Pull the wheel well lining from under the fender towards the inside.
2. Push the (3) plastic tab style clips from the inside to release the front of the fender.
3. Pinch the (2) plastic clips above the wheel from the inside.
4. Do this for both sides (driver & passenger).

NOTE: Not required for SRT & Summit style Bumper Fascia.



4

Remove Plastic Fasteners from Engine Bay

1. Using a flat head screw-driver, remove (2) plastic push fasteners.

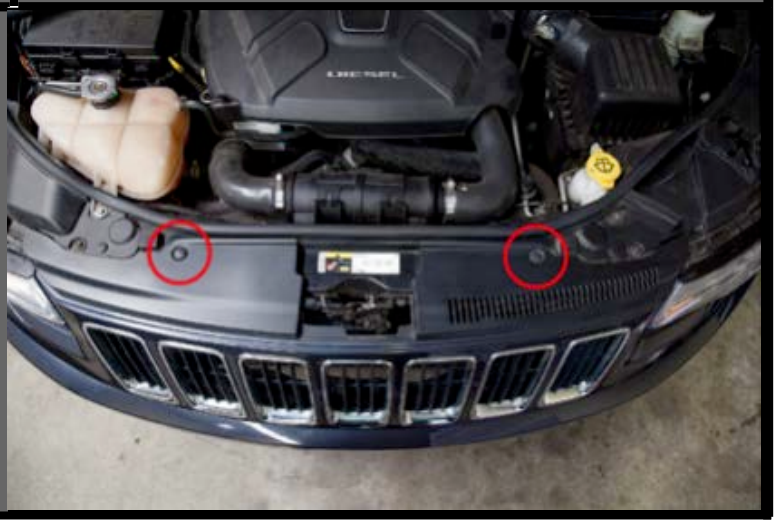

5

Remove underside OEM fasteners

1. By hand, quarter turn the fasteners to release them.





IF YOU HAVE:

- Summit Bumper ***(Go To Step 6)***
- Overland Bumper ***(Go To Step 7)***

6 SUMMIT

Releasing Bumper Fascia from Fender

1. Clear wheel liner from bumper connection.
2. Remove lower (white) clip from retainer by depressing the tag.

NOTE: Use of a flathead screwdriver can help release plastic white clip.



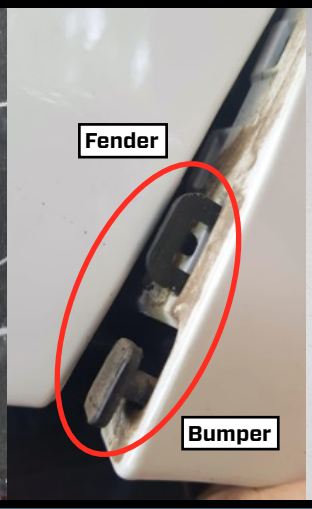



IF YOU HAVE:

- High Pressure Headlamp Washer on Bumper Fascia ***(Go To Step 7)***

7

Disconnect High Pressure Headlamp Washer

1. Secure Washer Panel and gently draw out Washer from the Bumper Fascia.
2. Holding the Washer gently, release the mount tags and remove Washer Panel from Bumper Fascia.



8

Unclip Upper Facia

1. Unclip upper facia from wheel wells on each side (drivers & passengers).
2. Unclip upper facia from head lights in engine bay on each side (drivers & passengers)
3. Set aside the upper facia in a safe place.

NOTE: For 2011-2012 Australian WK2's disconnect the headlight washer hose on the left side of the vehicle, (not shown).





9

Disconnect Parking Sensor Harness

1. Disconnect parking sensor wiring loom, located on the right hand side behind wheel liner.
2. Unplug sensor by releasing Red Locking Tab.

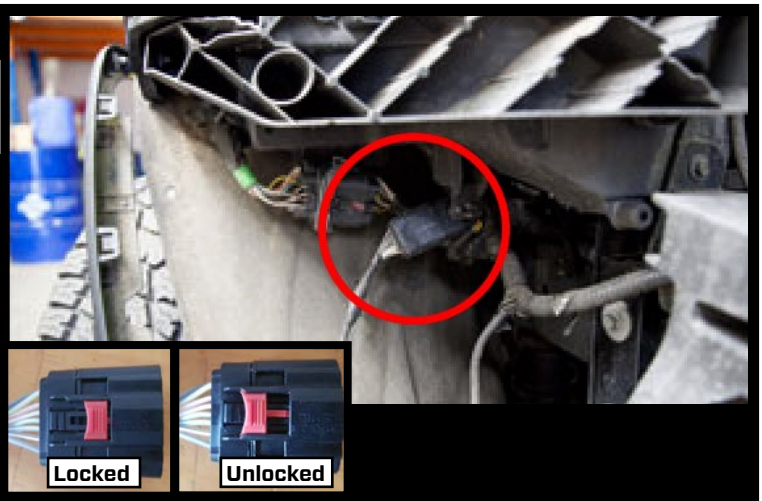

10

Disconnect Fog Lights

1. Release Fog Light harness plugs by unclipping the 2 outer tags (circled in red) then pull out.
2. Do this for both sides (driver & passenger).

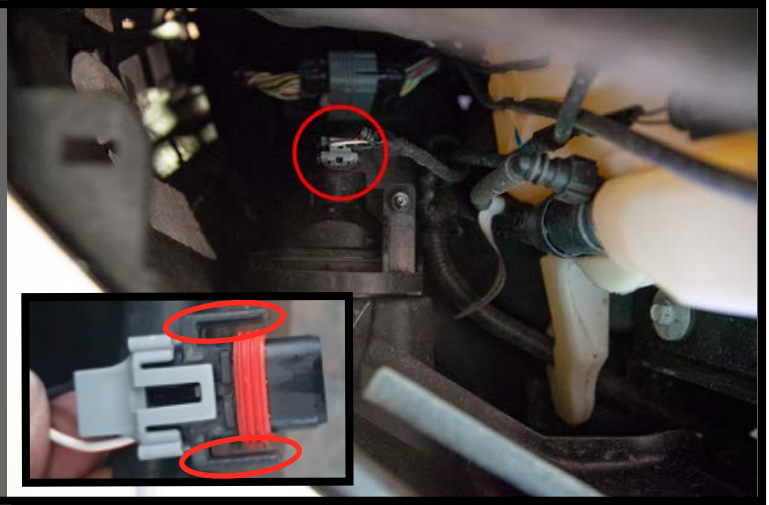

11

Remove Bumper Fascia

1. With all plugs unclipped, pull the complete Bumper Fascia from the vehicle.



12

Remove ACC Camera

1. Disconnect wiring loom from ACC camera.
2. Remove (2) M5 bolts holding the ACC camera bracket to the steel bumper (circled in red).
3. Set ACC camera aside in a safe place.

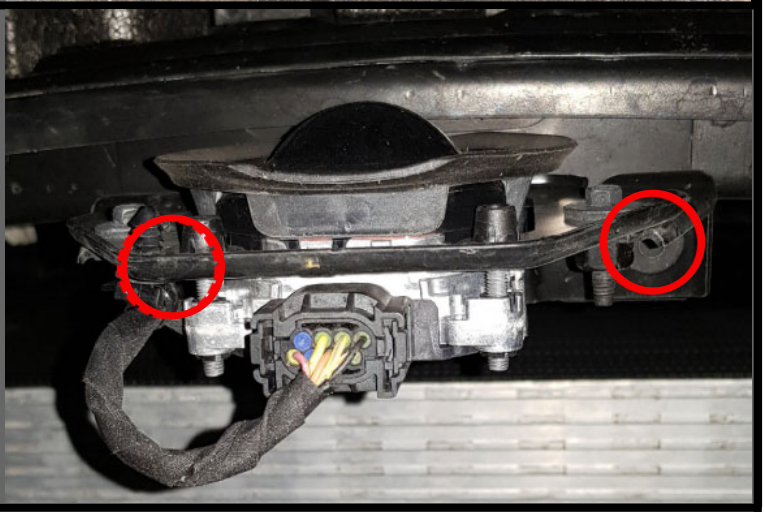

13

Remove Bumper Support

1. Remove (2) plastic fasteners from the Bumper Support.
2. Remove Bumper Support.

NOTE: Bumper Support is no longer needed.



IF YOU HAVE:

- OEM Tow Hooks ***(Go To Step 14)***
- No OEM Tow Hooks ***(Go To Step 16)***

14 OEM Tow Hooks

Remove OEM Tow Hook Bracket

1. Unbolt (2) M10 bolts [C in side diagram] holding OEM Tow Hook bracket to vehicle.
2. OEM Tow Hook Bracket can now be removed.

NOTE: This step is only required for WK2s with OEM Tow Hooks. This diagram is taken from Mopar's official installation instructions.

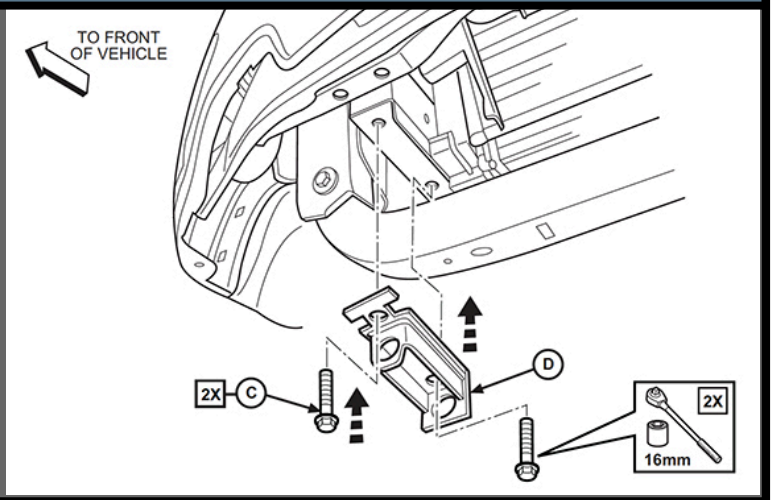

15 OEM Tow Hooks

Remove OEM Tow Hooks

1. Unbolt (2) M10 bolts [E in side diagram] holding front of Tow Hook to vehicle.
2. Unbolt 30mm Nut on backside [F in side diagram] and slide Tow Hook forward out of bracket.

NOTE: This step is only required for WK2s with OEM Tow Hooks. This diagram is taken from Mopar's official installation instructions.

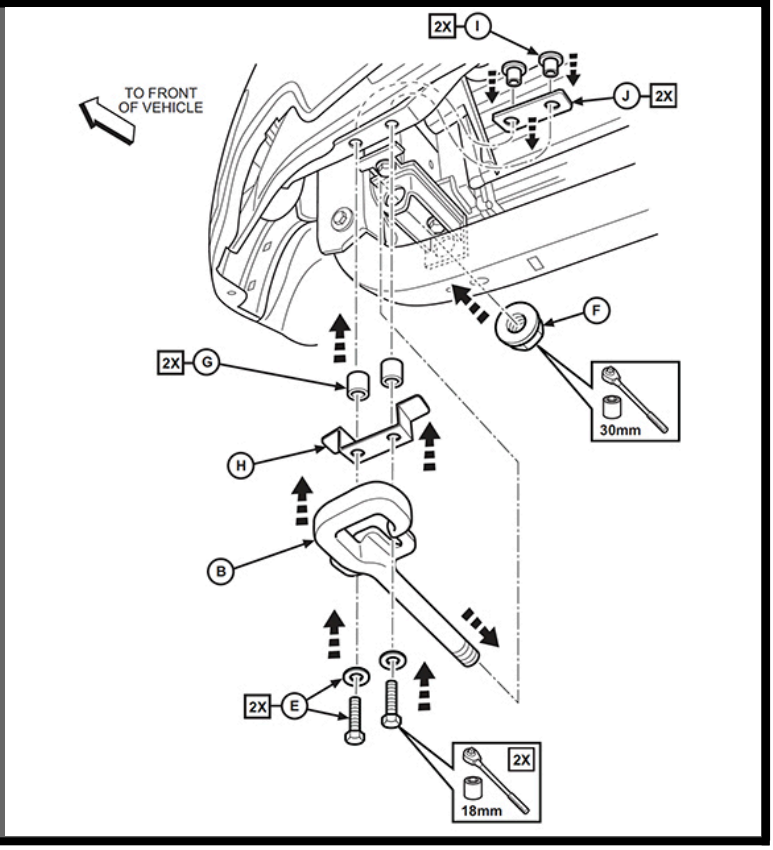

16

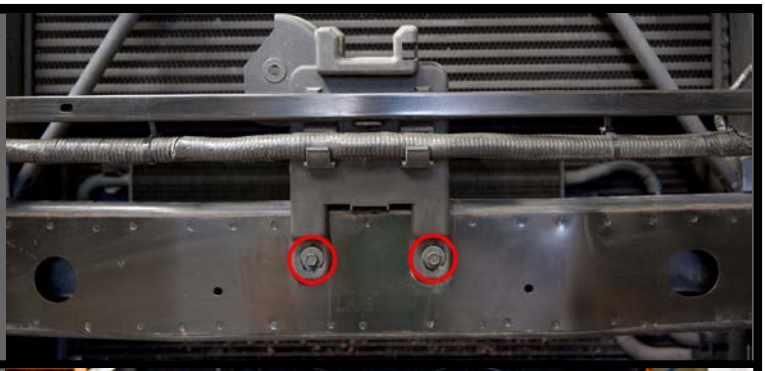

Remove OEM Wiring Loom Plastic Bracket

1. Remove (2) M5 bolts.
2. Remove OEM Wiring Loom Plastic Bracket and set aside.

NOTE: Not on all vehicles.

17

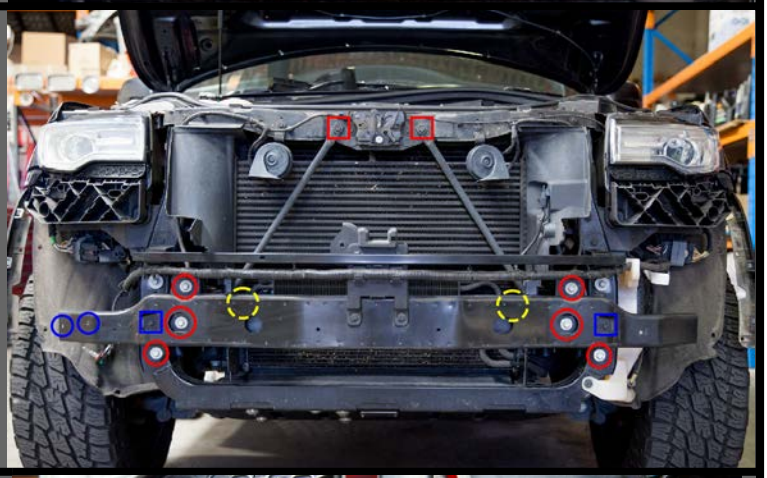

Remove OEM Steel Bumper

1. Remove (2) M8 Flanged Nuts (Blue Circle) from Air Compressor and set aside for later (if applicable).
2. Remove (1) M6 Bolt from each side (Blue Square).
3. Remove (3) M8 Bolts from each side (Red Circles).
4. Remove (2) M8 Bolts from bonnet struts (Red Squares).
5. Remove (2) Push Plastic Fasteners (Yellow Circle) from plastic parts on side, and set aside for use later.
6. Remove OEM Steel Bumper and set aside.

18

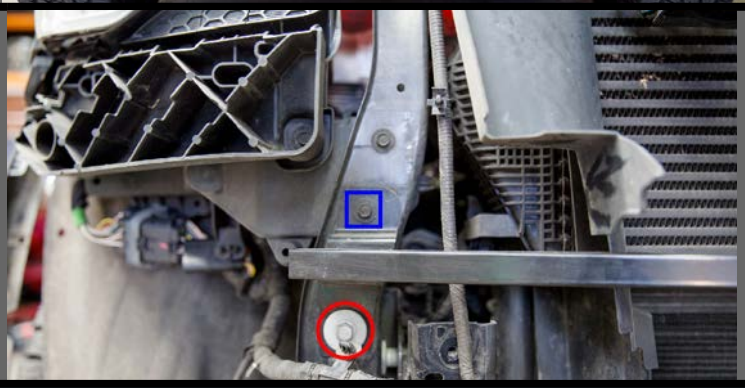

Remove OEM Wiring Loom Bar

1. Disconnect all clips from wiring loom bar.
2. Remove (1) M6 Bolt from each side (Blue Square).
3. Remove (1) M8 Bolt from each side (Red Circle).
4. Remove OEM Wiring Loom bar.

IF YOU HAVE A WINCH with:

- WK2 RECOVERY POINT-HOOK ***(Go To Step 19)***
- No WK2 RECOVERY POINT-HOOK ***(Go to Step 20)***

IF NON WINCH ***(Go to Step 36)***

19 WINCH + WK2 RECOVERY POINT-HOOK

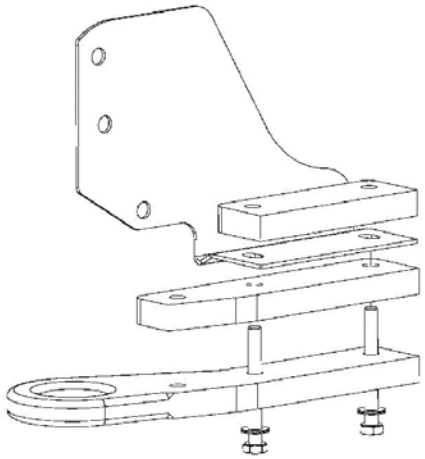

Install Chassis Support Plates

1. Place (1) Top Plate [**D**] on top of (1) Chassis Strengthening Plate [**B**] on top of the WK2 Recovery Hook/Point mounting plates.
2. Holding the entire stack together, place it against the frame and install (finger-tight), re-using your WK2 Recovery Hook/Point install bolts, (M10 x 90mm Bolts & Wedge-Lock Washers).
3. Do this for both sides (passenger & driver).

NOTE: Install Strengthening Bolt with Head Facing Downward .

20 WINCH

Install Chassis Support Plates

1. Place (1) Top Plate [**E**] on top of (1) Chassis Strengthening Plate [**C**].
2. Slide (1) M10 Wedge-Lock Extended Washer [**J**] on top of (1) M10 40mm Bolt [**G**]
3. Holding the entire stack together, place it against the frame and install (finger-tight), using (2) Bolt & Washer Combos.
4. Do this for both sides (passenger & driver).



21 WINCH

Install OEM Wiring Loom Bolt

1. Install (1) M6 OEM Wiring Loom Bolt into frame.
2. Do this for both sides (passenger & driver).



IF YOU HAVE:

- WK2 AIR SUSPENSION KIT ***(Go To Step 22)***
- NONE OF THE ABOVE ***(Go To Step 23)***

22 WINCH + WK2 AIR SUSPENSION KIT

Install Air Suspension Bracket

1. Slip the Air Suspension Bracket over the two fixed Air Suspension Bolts (Red Circles).
2. The mounting tabs on the Air Suspension Bracket should line up with the holes in the chassis.
3. Re-using (2) M8 Flanged Nuts (from Step 17) fasten the Air Suspension Bracket to the Air Compressor.
4. If you have a WK2 Air Suspension KIT, install the Chassis Mounting Bracket [**A**] on top of the Air Suspension Bracket so the tabs of the Air Suspension Bracket are sandwiched between the frame and the Chassis Mounting Bracket [**A**].

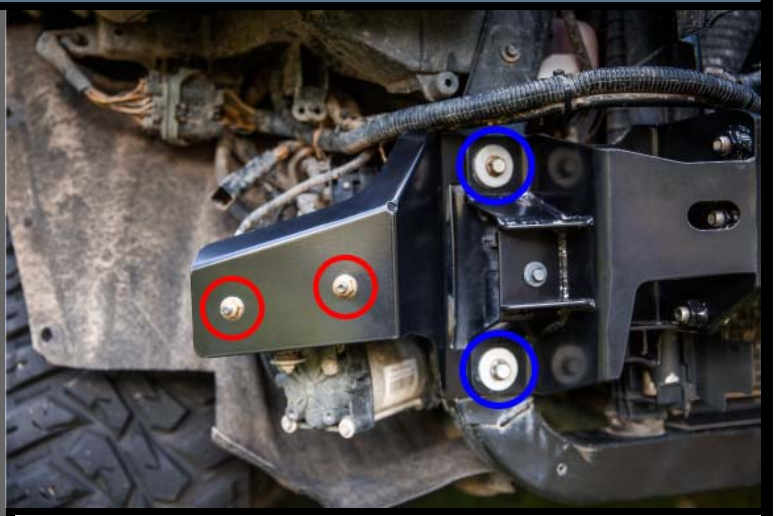

NOTE: The (2) M8 x 100mm Bolts (Blue Circles) and Chassis Mounting Bracket visible in the photo, will NOT be on the vehicle at this stage.

23 WINCH

Install Chassis Mounting Brackets

1. Hold (1) Chassis Mounting Bracket [**A-BOX 1**] against the frame and use (2) OEM M8 x 100mm Bolts (Red Circles), (2) OEM M8 x 40mm Bolts (Blue Circles) and (1) OEM M6 x 30mm Bolt (Blue Square) to attach bracket to vehicle, (finger-tight).
2. Do this for both sides (passenger & driver).

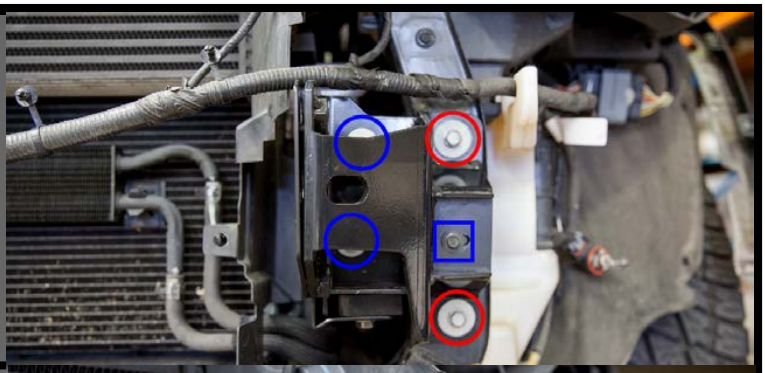

24 WINCH

Prepare for WK2 Winch Cradle Install

1. Slip (1) M12 Wedge-Lock Extended Washer onto (1) M12 35mm Bolt [**E**].
2. Install the Bolt & Washer combo into the top nut on the Chassis Mounting Bracket [**A**].
3. Do this for both sides (passenger & driver).



25 WINCH

Install WK2 Winch Cradle

1. Slip (1) M12 Wedge-Lock Extended Washer [**I**] onto (1) M12 35mm Bolt [**E**].
2. Slide Winch Cradle [**A**] onto the top M12 30mm Bolt & Washer Combo installed in the previous step.
3. Install the Bolt & Washer combo into the bottom nut on the Chassis Mounting Bracket [**A**].
4. Do this for both sides (passenger & driver).

NOTE: The install process is the same for both versions of the winch cradle.



26 WINCH

Install Bonnet Struts

1. Position (1) Bonnet Support Strut [**C**] against Winch Cradle [**A**] with the flange facing outwards or rearwards (depending on clearance). Place nutsert end (*blue circle*) so it lines up with hole in Winch Cradle. To achieve sufficient clearance for the radiator, the Bonnet Strut can be assembled to either the front or rear face.
2. Slip (1) M6 Wedge-Lock Extended Washer [**M**] onto (1) M6 25mm Bolt [**H**].
3. Attach (1) Bonnet Support Strut to Winch Cradle with the Bolt & Washer Combo (Blue Circle). Finger Tight.
4. Slip (1) M8 Wedge-Lock Extended Washer [**L**] onto (1) M8 x 30mm OEM Bolt (removed earlier).
5. Attach (1) Bonnet Support Strut [**C**] to Bonnet Support with the Bolt & Washer Combo (Red Circle). Finger Tight.
6. Do this for both sides (passenger & driver).

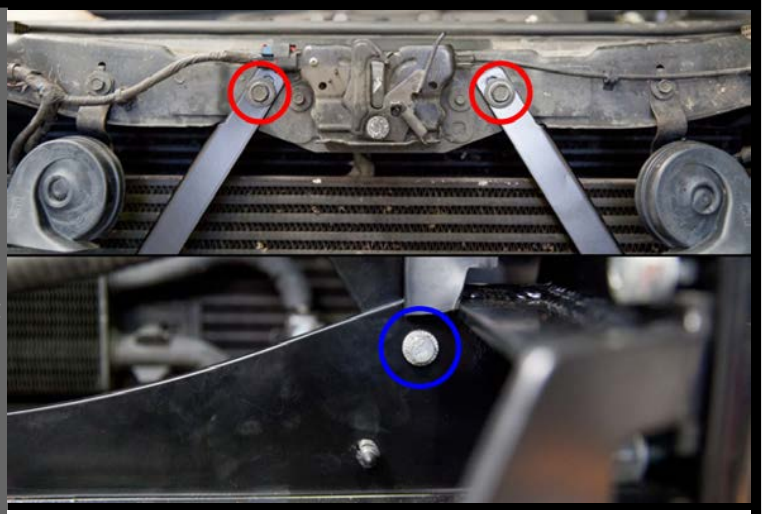

27 WINCH

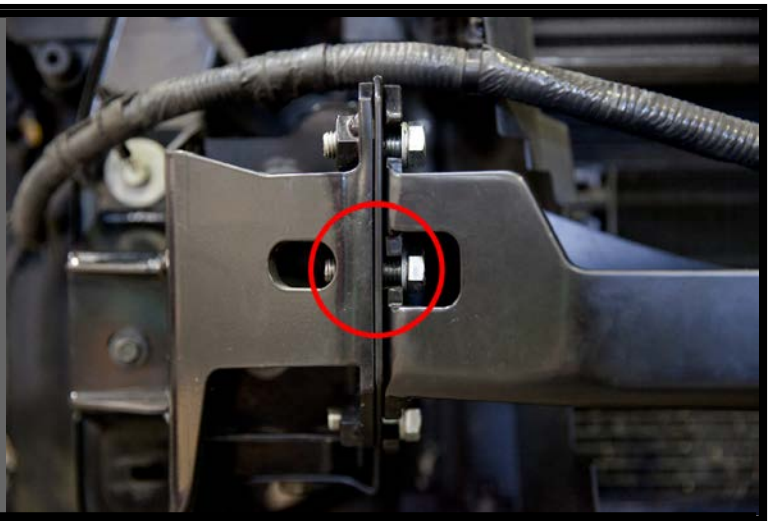

Install Final Centre Section Bolts

1. Slip (1) M12 Wedge-Lock Extended Washer [**I**] onto (1) M12 35mm Bolt [**E**].
2. Install the Bolt & Washer combo into the middle nut on the Chassis Mounting Bracket [**A**].
3. Do this for both sides (passenger & driver).
4. Prior to tightening any chassis mount bolts, check that mounts AND winch cradle are centred by measuring diagonally from headlamp corner to Chassis Mount/ Cradle. These 2 measurements should be equal (to within 4mm optimally to prevent fitment issues).

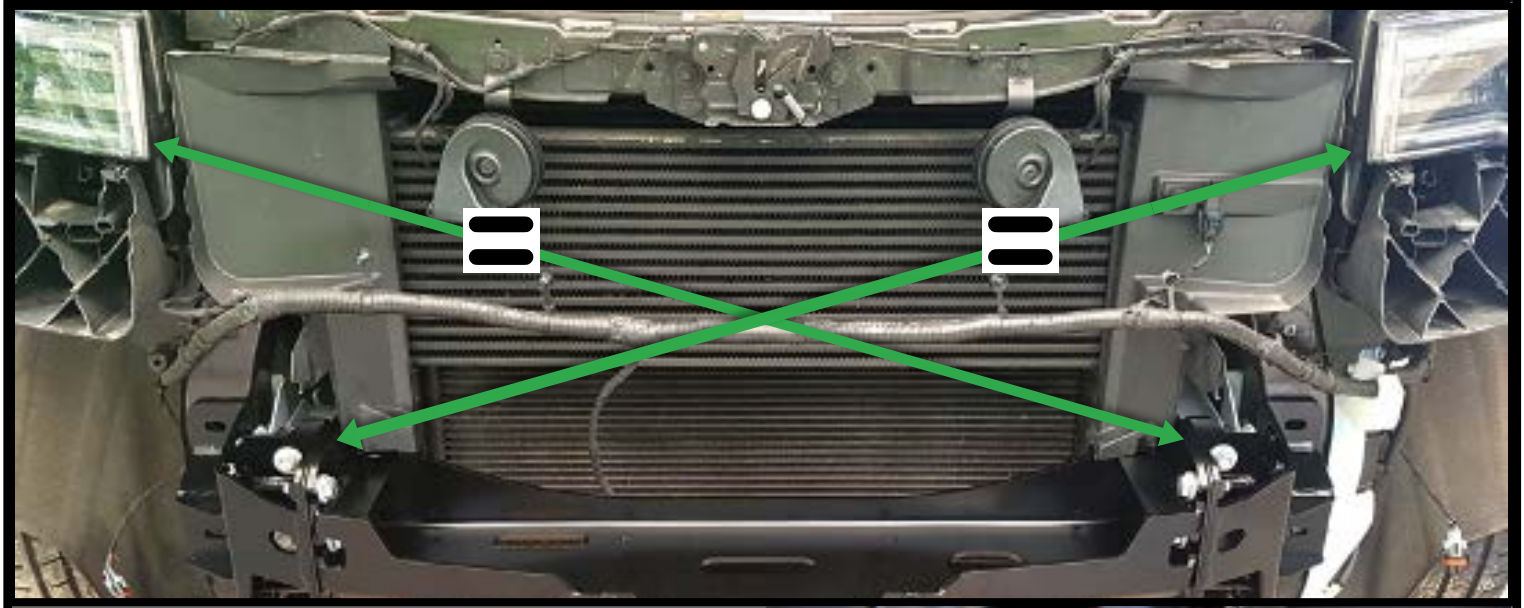

28 WINCH

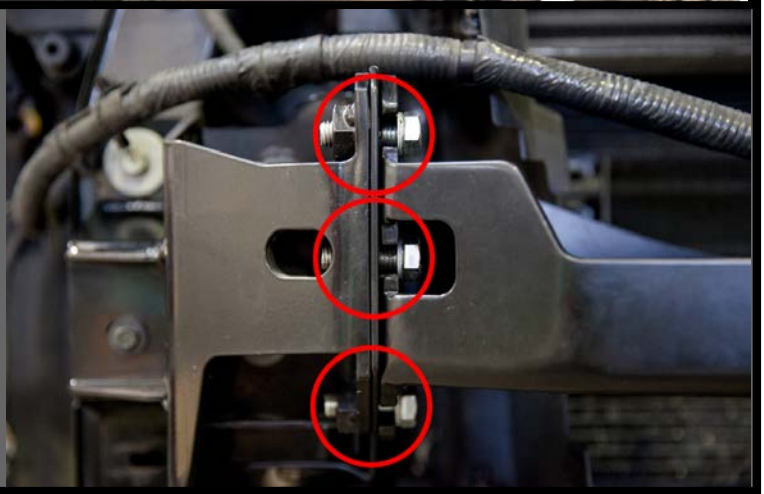

Tighten Winch Cradle Bolts

1. Pull the Winch Cradle [**A**] as far forward as possible.
2. Tighten (3) M12 x 35mm Bolts [**E**].
3. Do this for both sides (passenger & driver).

29 WINCH

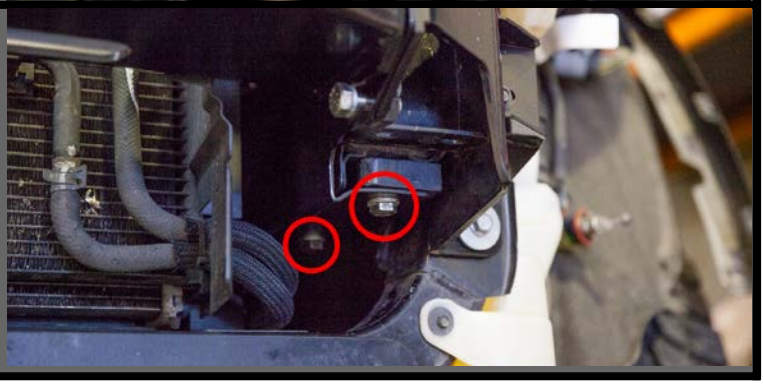

Tighten Chassis Support Plates

1. Tighten (2) M10 x 40mm Bolts [**F**].
2. Do this for both sides (passenger & driver).

30 WINCH

Tighten Mount Bracket

1. Tighten (2) M8 x 40mm Bolts (Red Circle), (2) M8 100mm bolts (Blue Circle) and (1) M6 25mm bolt (Blue Square).
2. Do this for both sides (passenger & driver).

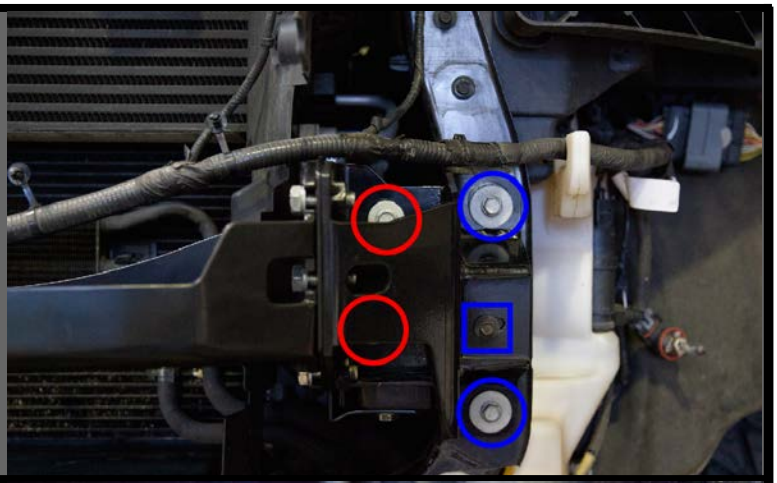

31 WINCH

Reinstall Plastic Push Clips

1. With (1) Plastic Push Clip, removed earlier (Step 12), reinstall to Winch Cradle [**A**].
2. Do this for both sides (passenger & driver).

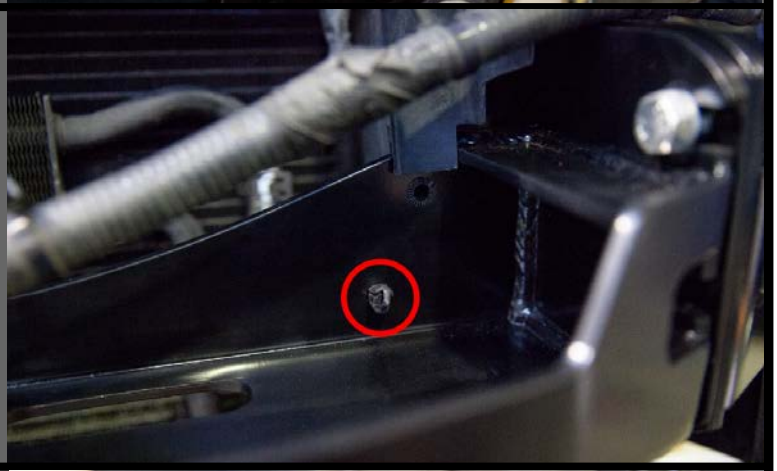

32 WINCH

Tighten Bonnet Struts

1. Tighten M6 x 25mm bolts [**H**] (Blue Circle).
2. Tighten M8 OEM bolts (Red Circle).
3. Do this for both sides (passenger & driver).

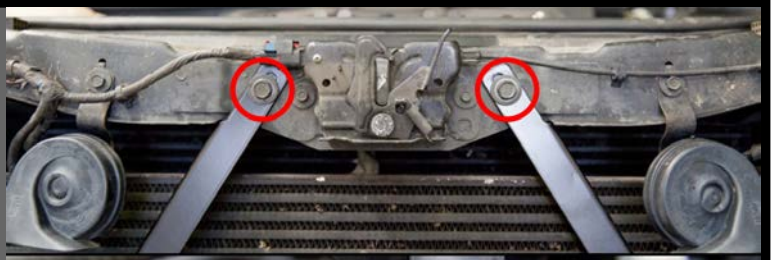



33 WINCH

Install Winch

1. Place your winch in the Winch Cradle [**A**].
2. Install (2) M10 Bolts provided with your winch to the front (2) nuts on your winch.
3. Run both wires underneath the right headlight and into the engine bay.
4. **Connect onto Winch Cradle [A] as per winch instructions.**



34 WINCH

Trim OEM Plastic Radiator Surround and Fix Wiring Loom

1. On some models of WK2's you may have to trim the radiator surround plastic to allow the wiring loom to pass through. Using a sharp blade, cut a hole (red lines).
2. Fix the wiring loom with some zip ties to the Bonnet Support Struts [**C**] (red circles).



35 WINCH

Install Fusion Fairlead to ORFB

1. Install Fusion Fairlead so that fastening bosses locate to the ORFB Centre (red circle).
2. Fasten using (2) M8 x 16mm Bolt [**C**] with M8 x 28OD Heavy Duty Flat Washers [**E**] (Torque to 20Nm).



INSTALLATION COMPLETE -- WK2 WINCH CRADLE + WK2 CHASSIS MOUNTS (Front)

IF YOU HAVE:

- WINCH + WK2 SUMP PROTECTION PLATE ***(Go to Step 45)***
- WINCH + NO WK2 SUMP PROTECTION PLATE ***(Go to Step 46)***

- NON WINCH + WK2 RECOVERY POINT/HOOK ***(Go to Step 36)***
- NON WINCH + NO WK2 RECOVERY POINT/HOOK ***(Go to Step 37)***

36 NON WINCH + WK2 Recovery Point-Hook

Bolt WK2 Recovery Point to chassis

1. Reference Point/Hook instructions:

https://cdn.shopify.com/s/files/1/0277/9567/files/wk2-recovery-point.pdf?2448074621604788239

NOTE: Step 8, install strengthening bolt facing the head down (highlighted in blue box)

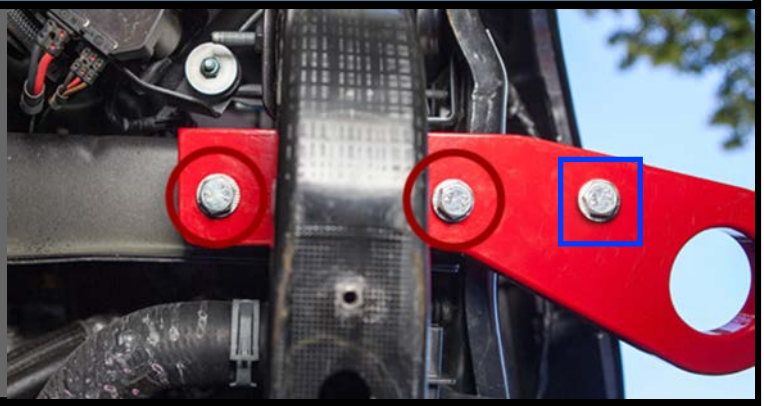

37 NON WINCH + No WK2 Recovery Point-Hook

Install OEM Wiring Loom Bolt

1. Install (1) M6 OEM Wiring Loom Bolt into frame.
2. Do this for both sides (passenger & driver).



IF YOU HAVE:

- WK2 AIR SUSPENSION KIT ***(Go To Step 38)***
- NONE OF THE ABOVE ***(Go To Step 39)***

38 NON WINCH + WK2 AIR SUSPENSION KIT

Install Air Suspension Bracket

1. Slip the Air Suspension Bracket over the two fixed Air Suspension Bolts (Red Circles).
2. The mounting tabs on the Air Suspension Bracket should line up with the holes in the chassis.
3. Re-using (2) M8 Flanged Nuts (from Step 17) fasten the Air Suspension Bracket to the Air Compressor.
4. If you have a WK2 Air Suspension KIT, install the Chassis Mounting Bracket [**A**] on top of the Air Suspension Bracket so the tabs of the Air Suspension Bracket are sandwiched between the frame and the Chassis Mounting Bracket [**A**].

NOTE: The (2) M8 x 100mm Bolts (Blue Circles) and Chassis Mounting Bracket visible in the photo, will NOT be on the vehicle at this stage.

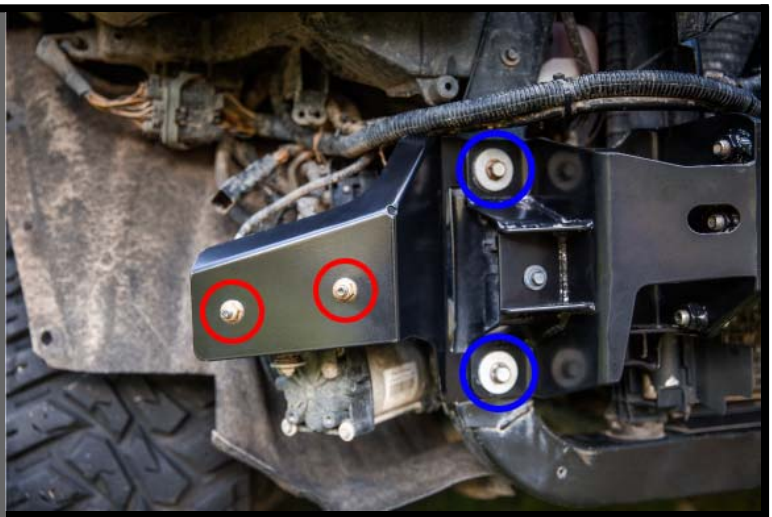

39A NON WINCH

Install Chassis Mounting Brackets

1. Hold (1) Chassis Mounting Bracket [**B**] against the frame and use (2) OEM M8 x 100mm Bolts (Red Circles), (2) OEM M8 x 40mm Bolts (Blue Circles) and (1) OEM M6 x 30mm Bolt (Blue Square) to attach bracket to vehicle, (finger-tight).
2. Do this for both sides (passenger & driver).

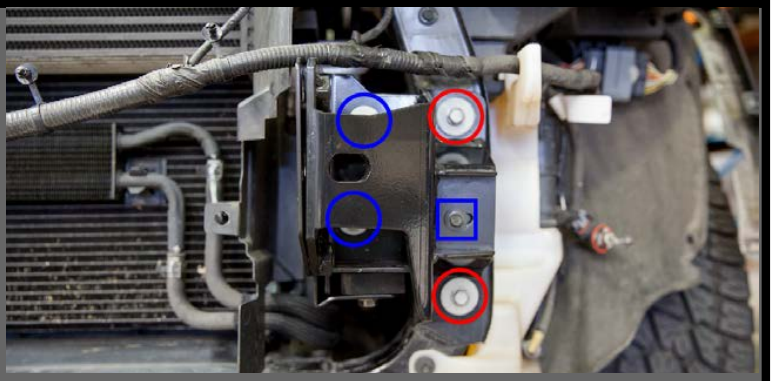

39B NON WINCH

Chassis Mount Alignment

1. Check mounts are centred by measuring diagonally from headlamp corner to Chassis Mount. The 2 measurements should be equal (to within 4mm optimally to prevent fitment issues). Measuring between the inside flat face of the Chassis Mounts should be ~780mm within 3mm to prevent difficulty later when installing ORFB. If incorrect, release bolts and adjust Chassis Mount location to achieve correct location, re-tighten and check sizes again.

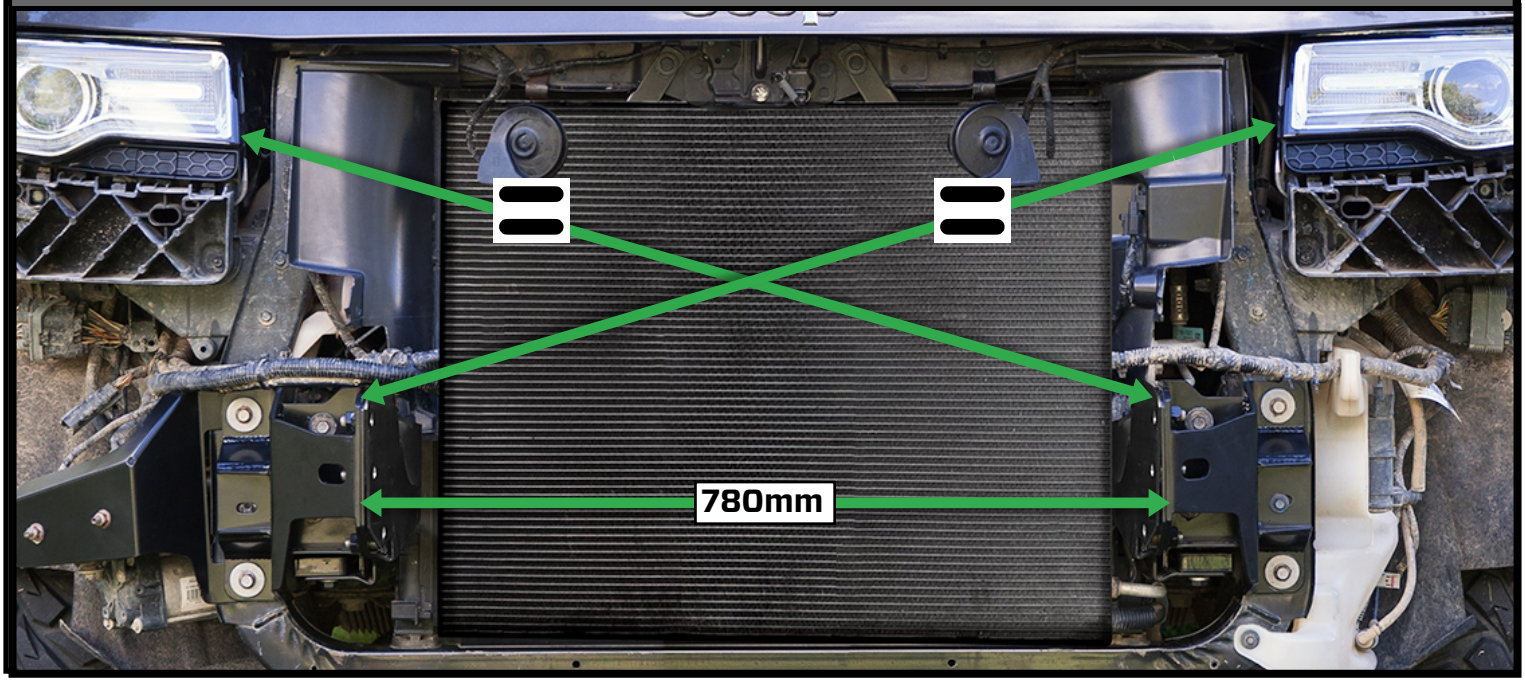

40 NON WINCH

Tighten Mount Bracket

1. Tighten (2) M8 x 40mm Bolts (Red Circle), (2) M8 x 100mm bolts (Blue Circle) and (1) M6 x 25mm bolt (Blue Square).
2. Do this for both sides (passenger & driver).

NOTE: Perform location checks with Chassis Mount tightened.

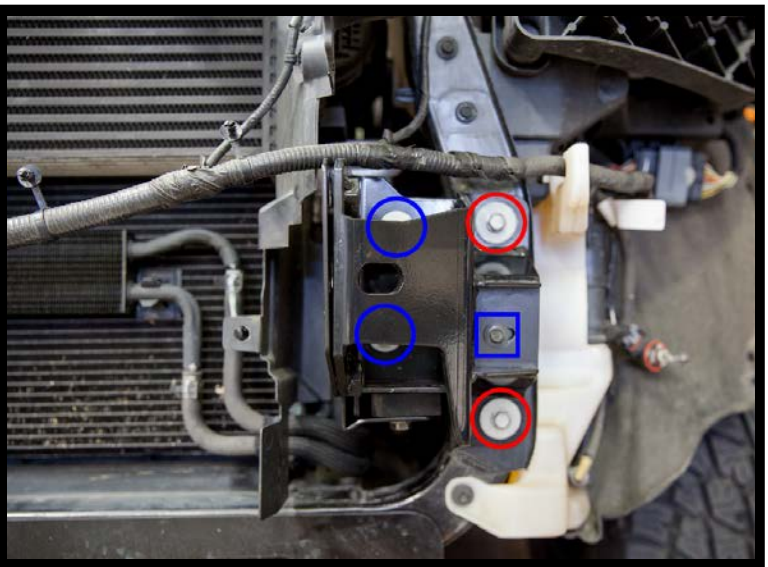

41 NON WINCH BONNET STRUT

Reposition Bonnet Strut

1. Remove Bonnet strut by unbolting (4) OEM Bolts holding the bonnet struts in place. Refasten the top OEM bolts that held the bonnet struts (*circled in* red). Remove additional (2) OEM M6 Bolts with an 8mm head (*in blue square*); put aside for reuse.
2. Flip the bonnet strut from its original orientation (drain hole facing outward), then reusing the M6 OEM bolts (*in blue* square) fasten the bonnet strut back onto beam into the the new OEM bolt hole location without tightening.

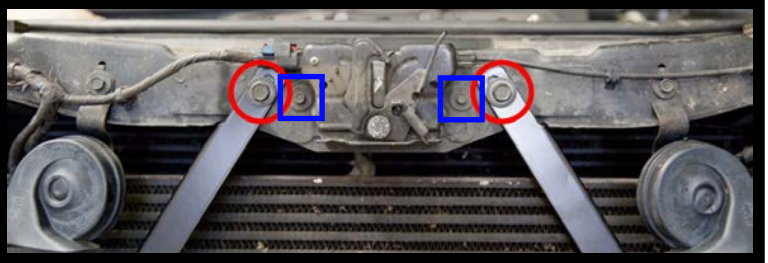

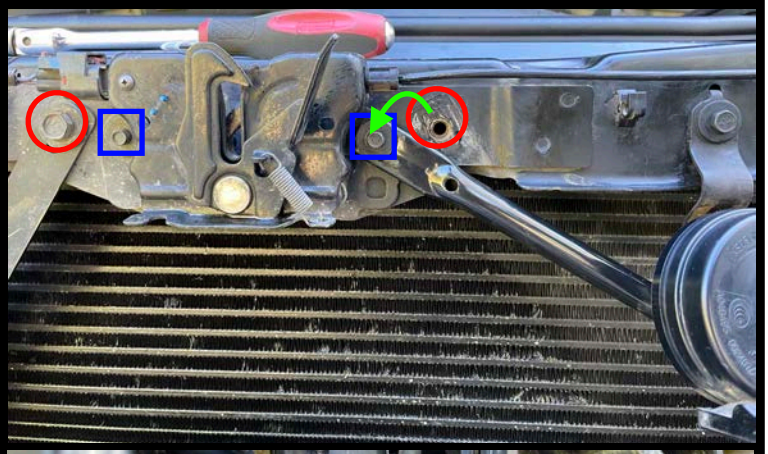

42 NON WINCH BONNET STRUT

Mark out and Drill New Bolt Hole

1. With the bonnet struts fastened at the top only, pivot the strut so it aligns over the bumper harness bolt hole on the cross bar (as shown), then mark the location on the bonnet strut to be drilled.
2. Drill a 7mm hole through the bonnet strut at the marked location.

NOTE: If plastic shroud interferes, remove temporarily.

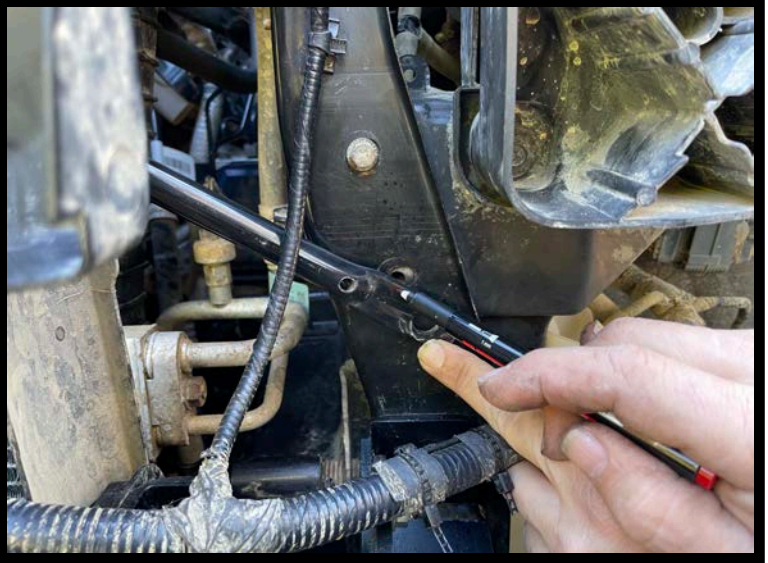

43 NON WINCH BONNET STRUT

Fasten Bonnet Strut into new Position

1. Tighten top (2) M6 OEM fasteners then slide (3) M8 Flat Washers [**V**] behind the bonnet strut and between the cross bar then fasten using M6 x 40mm Bolt [**M**] with M6 Extended-Locking Washers [**U**].

NOTE: If the vehicle horn obstructs the new position of the bonnet strut bend the horn bracket slightly.

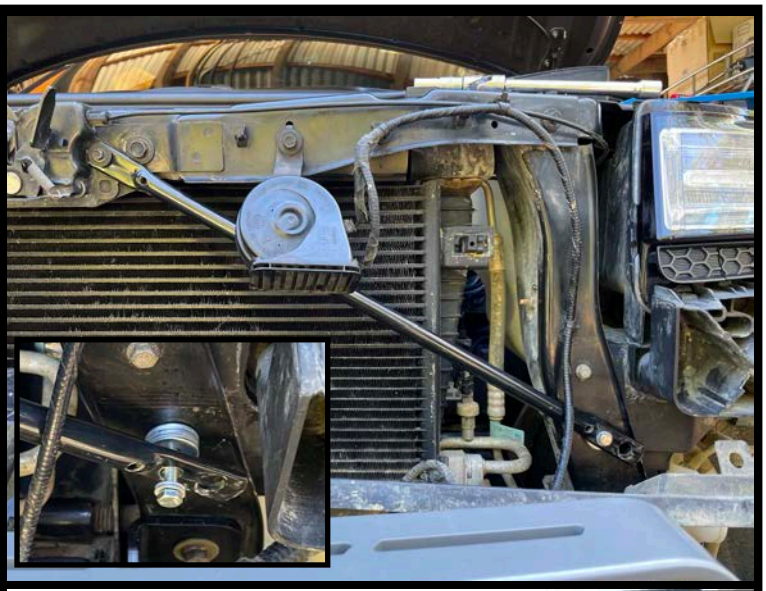

44 NON WINCH

Install Fairlead Cover to ORFB

1. Align studs on Fairlead Cover [**B**] through slots on ORFB [**A**] then fasten (4) M6 Flange Nylock Nuts [**Q**] to 10Nm.

NOTE: Ensure Fairlead Cover fits relatively even before tightening.





INSTALLATION COMPLETE -- WK2 CHASSIS MOUNTS (Front) + NON WINCH

IF YOU HAVE:

- WK2 Sump Protection Plate ***(Go to Step 45)***
- No WK2 Sump Protection Plate ***(Go to Step 46)***

For additional information refer to:
http://www.chiefproducts.com.au/installation/wk2-sump-protection-plate.pdf

45

Bolt Sump Protection Plate to vehicle

1. Slide (1) M8 Wedge-Lock Extended Washer [**G**] onto (1) M8 x 50mm Bolt [**D**].
2. Slide the bolt & washer combo up through the Sump Protection Plate [**A**].
3. Place (1) M8 3mm Bushing [**I**] on top.
4. Hold Sump Protection Plate [**A**] tight against the vehicle and thread the M8 x 50mm Bolt [**D**] into the frame. Tighten until finger tight.
5. Do this for both rear mounting points (circled in blue).
6. Leave front mounting points (circled in red) for tightening at Step 75.

NOTE: If WK2 SUMP PROTECTION PLATE is already installed on your vehicle; unbolt (4) M6 x 40mm bolts and (4) M6 Bolt Head Protectors, leaving the (2) M8 x 50mm Bolts fastened in the rear mounting points.

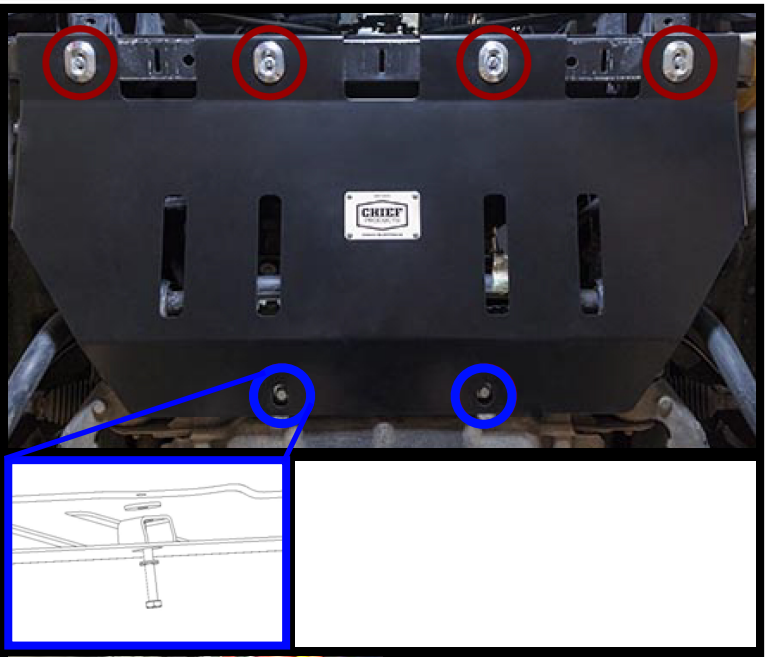

46

Install Bumper Mounts

1. Install Bumper Mount [**C**] to Chassis Mounting Bracket [**A**].
2. Locate the Brackets with Bumper Mounting faces outboard (shown in blue squares).
3. Fasten (2) M10 x 25mm [**G**] (circled in blue) and (3) M10 x 30mm Bolts [**F**] (circled in red) with M10 Wedge-Lock Washers [**H**] to the Chassis Mounting Bracket in the highlighted holes. Lightly hand tighten fasteners, so that Mount Brackets are free from movement.

NOTE: Bumper Mounts are the same for Non-Winch install.

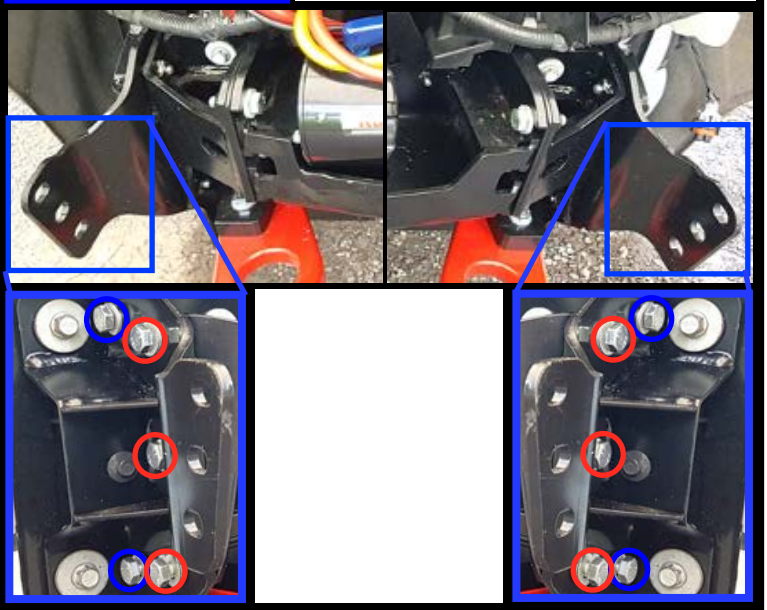

47

M6 Nutsert Upgrade

1. We recommend to perform a M6 Nutsert Upgrade [**K**] before installing the ORFB (parts supplied).

See:
http://www.chiefproducts.com.au/installation/wk2-m6-nutserts.pdf

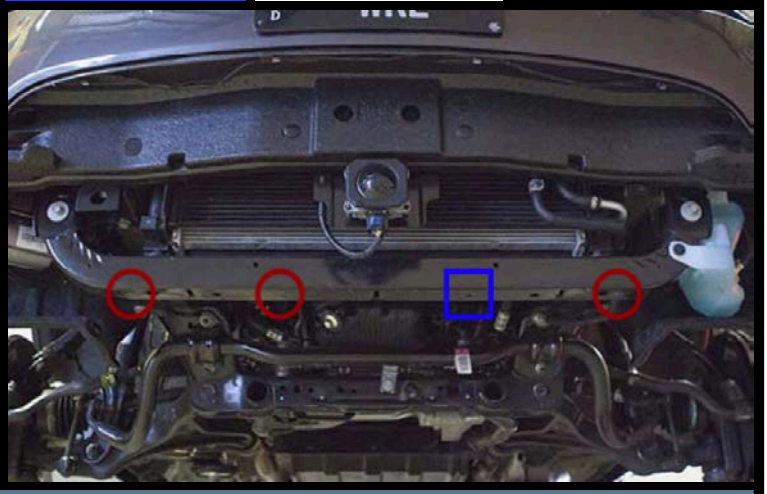

IF YOU HAVE:

- WINCH + ACC ***(Go to Step 48)***
- *NON WINCH* + ACC ***(Go to Step 49)***
- No ACC ***(Go to Step 52)***

48 WINCH + ACC

Installing ACC to WK2 Winch Cradle

1. Install ACC Radar using ACC Mount Bracket Winch [**C**] & ACC Guard [**A**]. Locate "Guard" as shown in-between Radar & ACC Bracket using supplied M6 x 20mm Bolts [**E**] and M6 Wedge-Lock Washers [**G**]; align "Cover" close to "Radar" and tighten M6 Bolts (circled in blue).
2. Fit "Radar Assembly" to Winch Cradle [**A**] using rear winch mounting bolts (circled in red); leave loose for later alignment. (Once Bumper is installed). ACC Mount Bracket Winch may need to be flipped to achieve the correct location as there are various OEM Radar Brackets.
3. Connect "Radar" harness plug.

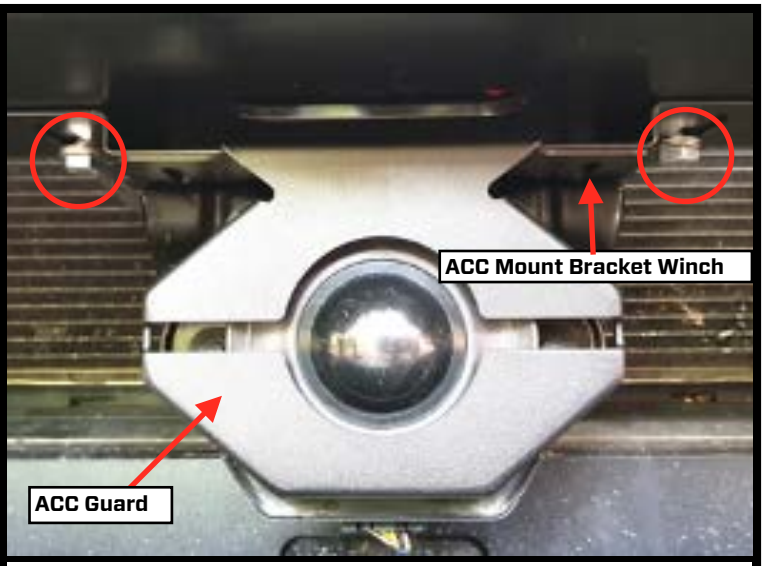

49 NON WINCH + ACC

Installing ACC with No Winch Cradle

1. Install ACC Mount Brackets Non-Winch [**B**] to ORFB Bumper [**A**] using 2 Bolt assemblies M10 x 25mm [**D**] with M10 Locking Washer [**F**] and M10 Flange Nut [**H**] combo for the top and (2) M6 x 20mm Button Head Socket [**E**] with M6 Flange Nylon Nut [**G**].

NOTE: Leave fasteners loose at this step.

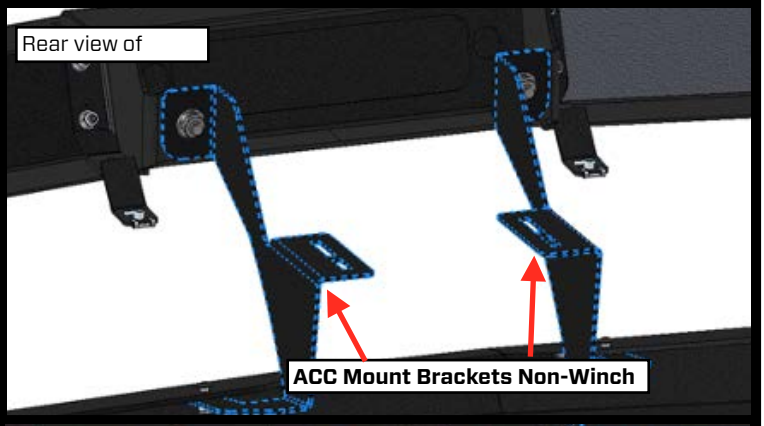

50 NON WINCH + ACC

Installing ACC with no WK2 WINCH CRADLE

1. Install O.E radar with ACC Radar Cover using (2) M6 x 20mm Button Head Socket [**E**], M6 Locking Washer [**G**] and M6 Flange Nut [**I**] combo.
2. Cover to have approximately 2mm clearance from the front face.

Note: "ACC Guard" is mounted between "O.E Bracket" and "ACC Mount Bracket Non-Winch" (red square).

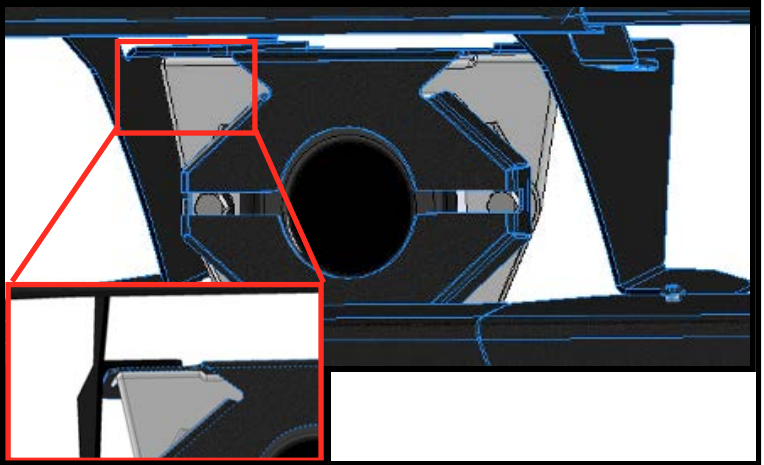

51 NON WINCH + ACC

Adjust ACC Guard Alignment

1. Adjust the location of the Radar Assembly *(Green face)* so that there is approximately 5 - 6mm clearance to the ORFB *(Blue face).*
2. ***IF*** Apex Grille is being installed; tighten M10 Fasteners to 50Nm and M6 Fasteners to 12Nm.
3. ***IF*** Nomad Grille is being installed; tighten M10 Fasteners to 50Nm. Tighten top M6 bolts for ACC Guard. Leave lower fasteners for ACC Mount Brackets [**B**] loose (red circles).

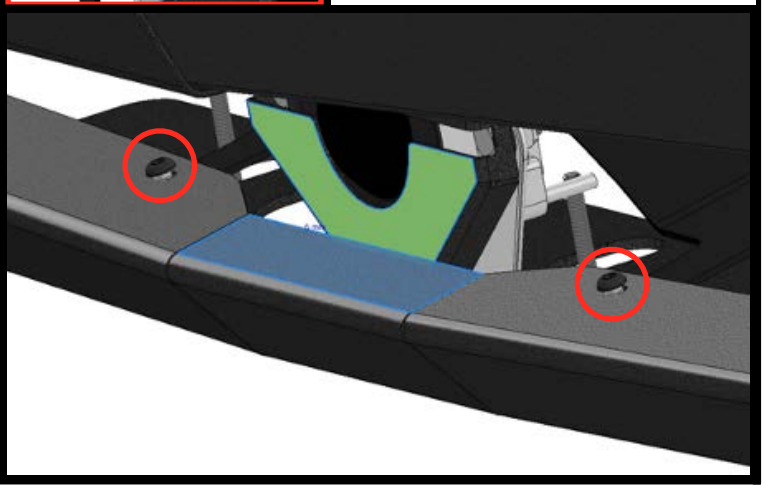

BUMPER FASCIA TRIMMING GUIDE

*The following is specified steps for S-Limited and Summit bumpers. For greater detail on the bumper cut required for your specific model, refer to the **Appendix** on Page 37.*

52 BUMPER

Mount Bracket Cut out

1. For some vehicle models, the only necessary cut may be for the Mount Bracket slots (verify your case using the appendix). Hand tighten the Mounting Brackets [**C**] into place so they're free of movement.
2. Offer the Bumper Fascia into the correct place on your vehicle and identify the cut required than mark out using a marker or tape.

Note: It is recommenced to progressively make the cut, starting at a smaller area then refitting and marking until acceptable clearance is reached.

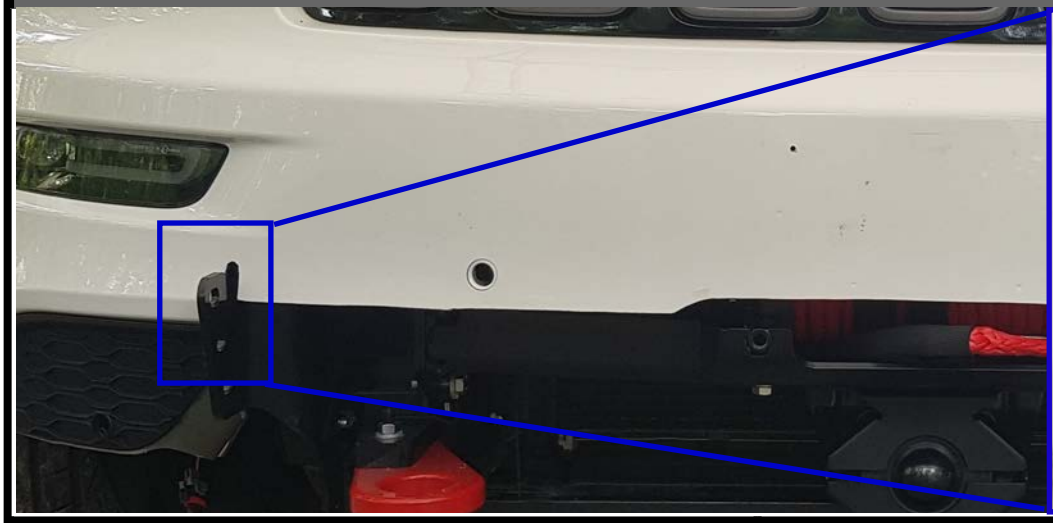

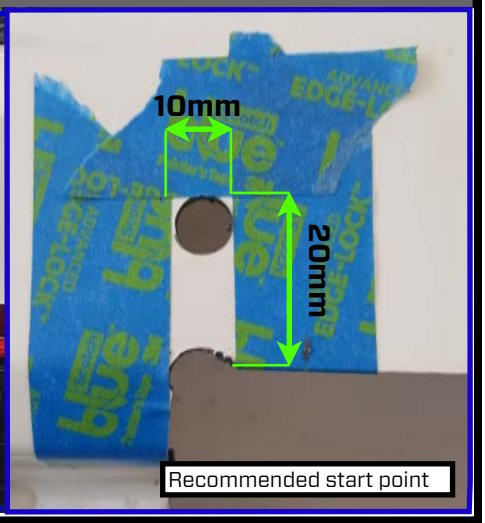

53 BUMPER

Bumper Fascia Preparation, Marking out and trimming

1. Remove all parking sensors including the harness from Bumper Fascia.
2. Remove lower bumper panel (highlighted in red) by unclipping the clips and removing the screws.
3. Pop lower centre grille out of Bumper Fascia.



54 BUMPER

Bumper Fascia Preparation, Marking out and trimming

1. Remove LH and RH outer Grille & Surround panel from Bumper Fascia by unscrewing the screws highlighted in red.
2. Unclip the Grille from the Surround by pushing out the black clips.



55 BUMPER

Bumper Fascia Trimming

1. Using a 10mm drill bit, drill a hole in both top centre cut corners.

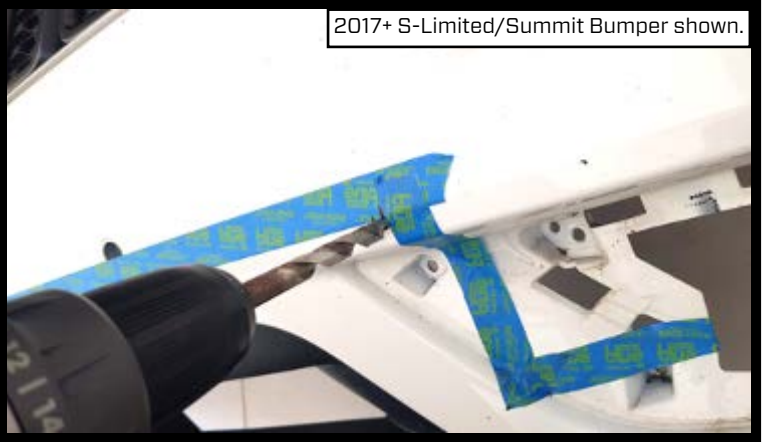

56 BUMPER

Bumper Fascia Trimming (Stage 1)

1. Starting from the holes drilled in the previous step, trim across the top line.
2. Cut vertical widths next then finally the lower cuts.
3. Dress all trimmed edges using a smooth file.

NOTE: Recommend cut order for best support when cutting.

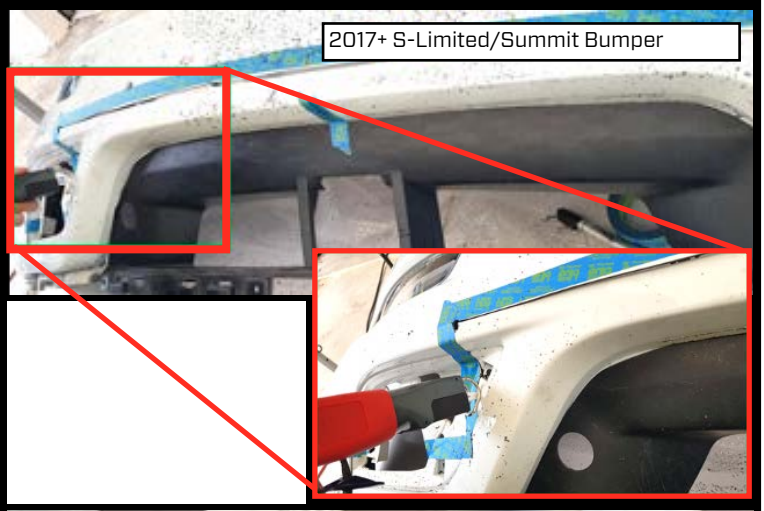

57 BUMPER

Bumper Fascia Trimming (Stage 2)

1. Remove surround grille feature from Bumper Fascia and mark the area along the feature line (red line) for cutting.



58 BUMPER

Bumper Fascia Trimming (Stage 3)

1. Using the already trimmed Bumper Fascia as a guide, mark the lines shown in the image.
2. Reassemble grille insert back into trimmed surround.
3. Dress all trimmed edges using a smooth file.

NOTE: Leave at least 10mm of material on the bottom portion.

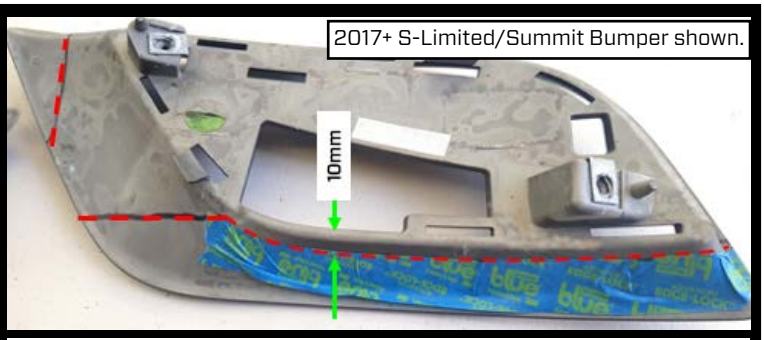

59 BUMPER

Bumper Fascia Trimming for Bumper Mount [C]

1. Mark out the Bumper Mount [**C**] top clearance on the bumper. For the S-Limited Summit ~20mm x 10mm of clearance is required from the pre existing cuts.
2. Using a 10mm drill piece, drill a hole to help trim marking out area.

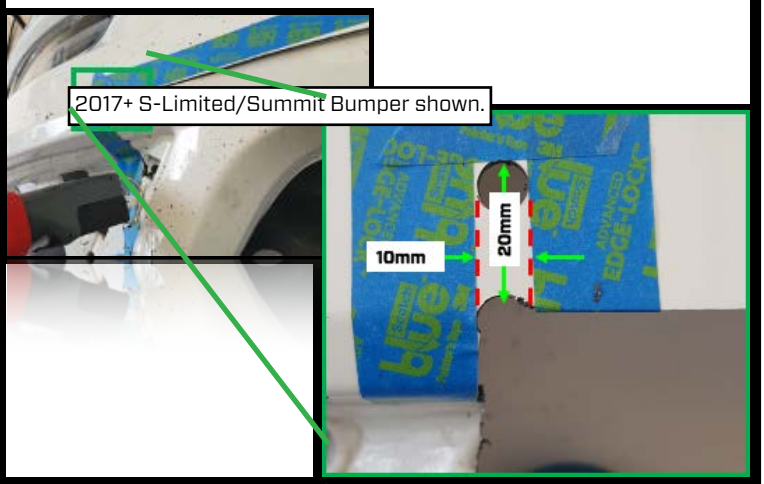

60 BUMPER

Bumper Fascia Trimming for Winch Cradle

1. Mark out and trim the centre of the Bumper Fascia to give clearance to the winch rope; cutting equally about the centreline.
2. Dress all trimmed edges using a smooth file.

NOTE: Check the clearance from the Winch drum diameter. More or less cutting may be required.

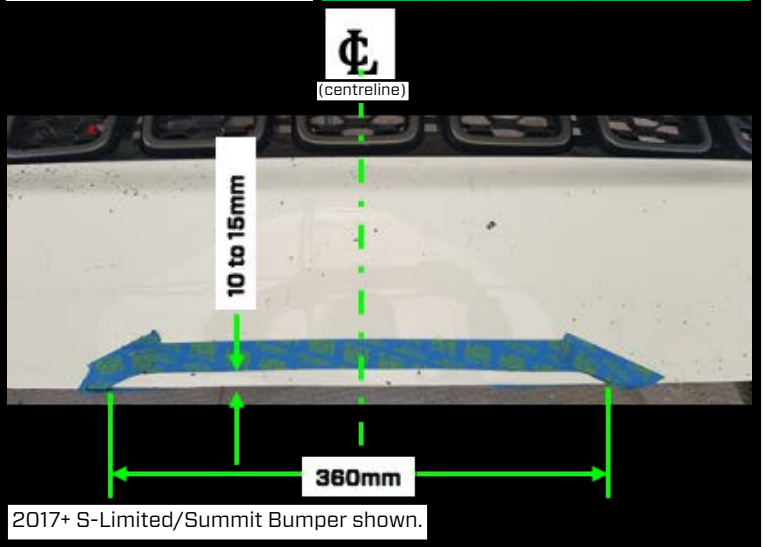

BUMPER FASCIA TRIMMING COMPLETE

WK2 OFF-ROAD FRONT BUMPER **INSTALLATION START**

ORFB preparation:
Prior to bolting the ORFB [**A**] onto your vehicle, it is recommended to fit chosen accessories on to ORFB before installing it onto the vehicle.

S-Limited/Summit models require the Bumper Fascia to be installed prior to fitting the ORFB onto the vehicle.

Overland, Limited and Trail Hawk style Bumper Fascia's can be installed after the ORFB has been mounted.

WK2 OFF-ROAD FRONT BUMPER -- NUMBER PLATE MOUNT KIT

IF YOU HAVE:
- "CENTRE MOUNT" NUMBER PLATE ***(Go to Step 61)***
- "SIDE MOUNT" NUMBER PLATE ***(Go to Step 62)***
- NO NUMBER PLATE MOUNT KIT ***(Go to next KIT)***

61 NUMBER PLATE MOUNT KIT

Installing Centre Mount Number Plate

1. Using (4) M6 x 20mm Button Head Socket [**E**] with M6 Wedge-Lock Washer [**H**] and M6 Flange Nylock Nut [**J**], bolt Centre Mount Number Plate [**A**] to the top of the ORFB [**A**].
2. Install Number Plate to Centre Mount [**A**] using supplied bolts:
   For USA variant use M6 Button Head [**F**] with M6 Flat Washer [**I**] and M6 Flange Nuts [**K**].
   For AUS variant use M5 Button Head [**F**] with M5 Flat Washer [**I**] and M5 Flange Nuts [**K**].



62 NUMBER PLATE MOUNT KIT

Installing Side Mount Number Plate

1. Install Number Plate [**B**] using (1) M6 x 20mm Countersunk Socket [**G**] (circled in red) and M6 Flange Nylock Nut [**J**]. *(Leave loose if installing Nomad Grille).*
2. If NO Mach II Aero-Bar is being installed, fasten (2) M10 x 25mm Button Head Socket [**C**] (circled in blue) with M10 Flange nuts [**D**].
3. If Mach II Aero-Bar is being installed leave aside fasteners for Mach II Aero Bar installation.
4. Install Number Plate to Side Mount using supplied bolts:
   For USA variant use M6 Button Head [**F**] with M6 Flat Washer [**I**] and M6 Flange Nuts [**K**].
   For AUS variant use M5 Button Head [**F**] with M5 Flat Washer [**I**] and M5 Flange Nut [**K**].

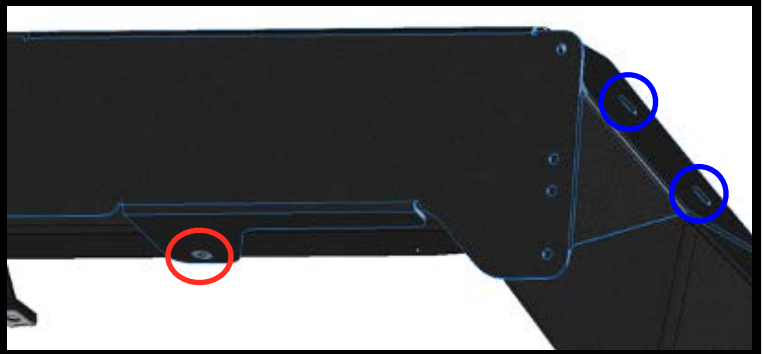



Australian plate shown.

WK2 OFF-ROAD FRONT BUMPER -- ADVANCED PARKING SENSOR KIT

IF YOU HAVE:
- ADVANCED PARKING SENSOR KIT ***(Go to Step 63)***
- NO ADVANCED PARKING SENSOR KIT ***(Go to next KIT)***

63 ADVANCED PARKING SENSOR KIT

Identify which Harness Extension to Use

1. Inspect vehicle Inner Sensor harness plug that connects to the Parking Sensor.
2. Compare to supplied Sensor Harness Extensions [**G**]/[**H**] and selected the matching plug.





64 ADVANCED PARKING SENSOR KIT

Identify Middle Parking Sensor Type

1. IF middle parking sensor has a Harness Plug connecting to the rear (shown in the top 2 images), trimming is necessary for the outer parking sensor housing.
   NOTE: No Harness Extension is needed with this sensor.
   (Go to Step 66)
2. IF middle parking sensor has a Harness Plug connecting to the side (shown in the bottom 2 images), trimming isn't needed.
   (Go to Step 69)









65 ADVANCED PARKING SENSOR KIT

Outer Parking Sensor Housing Trimming

1. Trim the cut out on both Sensor Outer Housing [**D**] (PART #: CP188000-0063/ CP1880000-0064). Using a Utility Knife to remove the recessed panel (as shown).







66 ADVANCED PARKING SENSOR KIT

Outer Parking Sensor Housing Trimming

1. Dress trimmed edges using a small file or sandpaper.
2. Test fit the Parking Sensor with the harness attached; once fit is OK proceed to installing retainer.





67 ADVANCED PARKING SENSOR KIT

Retainer Install

1. Install (2) Sensor Retainer Outer *Large* [**E**] (highlighted in blue) using L for CP188000-0063 housing and R for CP188000-0064 housing.
2. Using supplied M3.5 (6G) x 13mm Screw, Self Tapping [**O**] (highlighted in red), secure retainer into place.



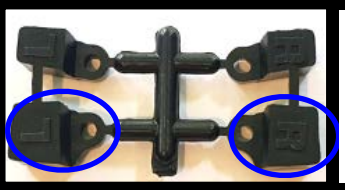

68 ADVANCED PARKING SENSOR KIT

Install Sensors to Outer Housing

1. Install (2) retainers that allow best fit using L for CP188000-0063 housing and R for CP188000-0064 housing.
2. Using supplied M3.5 (6G) x 13mm Screw, Self Tapping [**O**] (highlighted in red), tighten retainer into place.



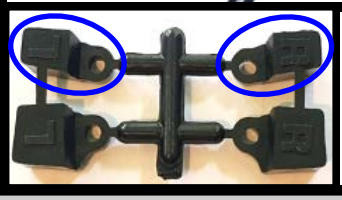

69 ADVANCED PARKING SENSOR KIT

Install Sensors To Inner Housing

1. Plug Harness Extension [**G**-**H**] into the Parking Sensor Plug.
2. Install (2) Sensor Retainer Inner [**C**] using L for CP188000-0061 housing and R for CP18800-0062 housing.
3. Using Supplied M3.5 (6G) x 13mm Screw, Self Tapping [**O**] secure retainer into place.

NOTE: Depending on Sensor model, retainer orientation will rotate 90 degree (as shown) to ensure a sensor fits snug.





70 ADVANCED PARKING SENSOR KIT

Parking Sensor KIT Fitment

1. Locate both Sensor Housing Inner LH & RH [**B**] to the Top Bar [**A**] (as shown).
2. Route the Harness Extension lead out of the housing ensuring there is clearing for the fasteners to prevent pinching (as shown in middle image).
3. Install the Top bar with the parking sensor housings on the top of the ORFB using (4) M6 x 60mm Counter Sunk Screws [**K**] with M6 Hex Flange Nylock [**L**].
4. Before tightening, align housing to the rear edge of the ORFB [**A**].
5. Lightly tighten the Screws to a toque of 5 Nm maximum.

IMPORTANT: Over tightening the Top Bar fasteners (circled red) can cause false sensor detection.





71 ADVANCED PARKING SENSOR KIT

Parking Sensor KIT Fitment

1. Install Blanking Plug 20mm Dia Head [**I**] into the OEM Sensor location on the Bumper Fascia (circled in red).
2. Black Sensor Stickers [**J**] have been provided to change the sensors face colour if required.

*NOTE: Plastic Nylon Plug [**I**] can be painted to match vehicle colour with suitable paint.*





72 ADVANCED PARKING SENSOR KIT

Installing Outer Parking Sensors Housings

1. Install Parking Sensors Outer Housing [**D**] into the Slot on the ORFB; fasten housing down using M6 x 12mm Button Head Socket [**M**] and M6 Flat Washer [**N**]. Torque to 5 Nm.



WK2 OFF-ROAD FRONT BUMPER -- MACH II AERO-BAR KIT

IF YOU HAVE:
- Mach II Aero-Bar ***(Go to Step 73)***
- NO Mach II Aero-Bar go to next prompt.

73 MACH II AERO-BAR KIT

Installing Mach II Aero-Bar

1. Align Mach II Aero-Bar [**A**] with the 14mm holes at the top of ORFB [**A**].
2. Fasten Aero Bar sliding M12 Nut Plate [**B**] into Bumper cavity and align; install M12 x 30mm Countersunk Socket [**C**] into Nut Plate and fasten.

NOTE: When installing Mach II Aero-Bar in conjunction with the Side Mount Number Plate, sandwich the plate between the ORFB and Aero Bar. Tighten M12 Countersunk Screws.

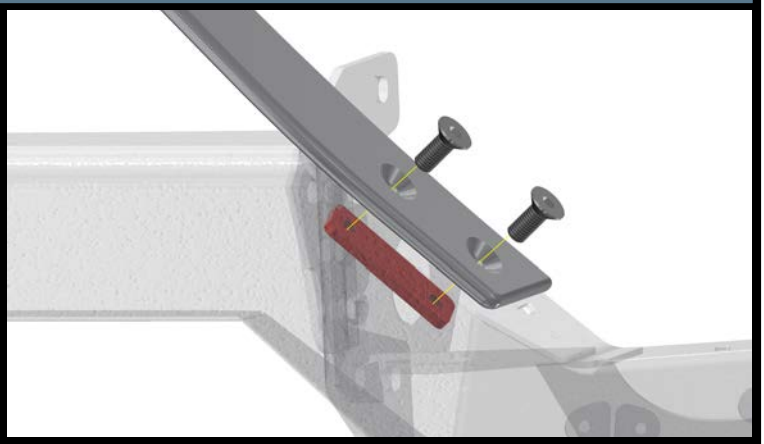

74

Installing ORFB

1. Loosen M10 Fasteners (circled in red) securing Bumper Mounts [**C**] to Chassis Mount Brackets [**A**] sufficiently to allow Bracket to move by 4-6mm.



IF YOU HAVE:
- Summit/S-Limited Bumpers ***(Goto Step 75)***
- Overland, Laredo, Limited, and Trailhawk Bumpers ***(Go to Step 76)***

*NOTE: If Bumper Fascia can be installed after ORFB [**A**], (as described in the ORFB installation notes) delay this step.*

75 SUMMIT/S-LIMITED

Reinstall Bumper Fascia

1. Reattach the Bumper Fascia and wheel liner to the vehicle.
2. Ensure the Bumper Fascia has sufficient clearance from the ORFB [**A**] before tightening the fasteners into place.

NOTE: This step may not be relevant depending on bumper variant.



76 ALL VEHICLES

Installing ORFB

1. Install ORFB [**A**]. Rest on Mounts then fasten (6) M10 x 25 bolts [**G**] with M10 Wedge-Lock [**H**] washers on the LH and RH sides loosely.
2. Fit (4) M10 x 30mm [**F**] bolts with M10 Wedge-Lock Washers [**H**] and M10 Flange Nuts [**I**] at the bottom slots.

NOTE: ORFB "Mount Bracket" is located on the "Outboard Side" of the "ORFB Bracket".

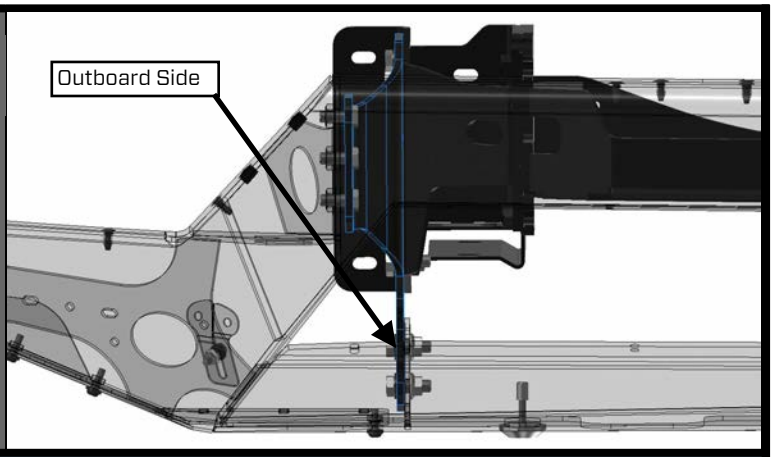

IF YOU HAVE:
- Winch ***(Go to Step 77)***
- Non-Winch ***(Go to Step 78)***

77 ALL VEHICLES + WINCH

Installing ORFB to Vehicle

1. Align the the the M12 Hidden Winch Cradle nuts with the holes on the ORFB [**A**] and fasten (loosely) (2) M12 x 20Lg Bolts [**B**] (circled in red) with M12 Wedge-Lock Washers [**D**], supplied with Fusion Fairlead.
2. Fit (4) M6 x 40 Bolts [**M**] (circled in blue) With M6 Wedge-Lock Washers [**P**]; slotting the the Bolt Head Protectors [**J**] into the lower bash plate area.

NOTE: Leave fasteners loose to allow ORFB movement.

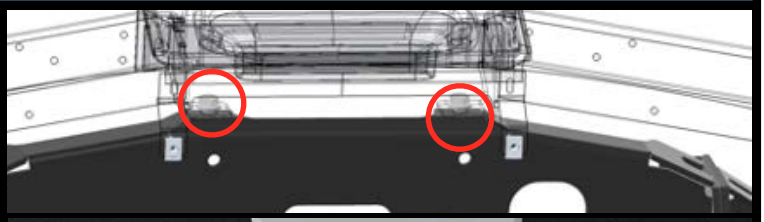

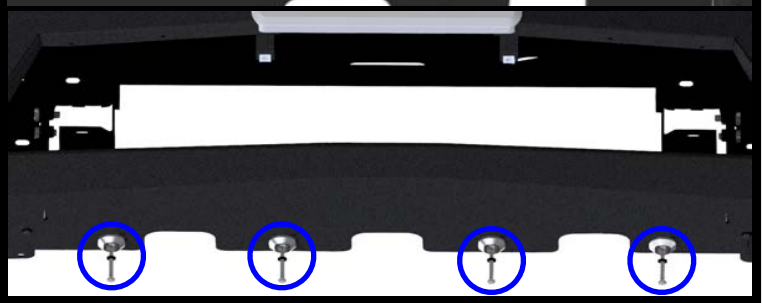

78 ALL VEHICLES + NON WINCH

Installing ORFB to Vehicle

1. Fit (4) M6 x 40 Bolts [**M**] (circled in blue) With M6 Wedge-Lock Washers [**P**]; slotting the the Bolt Head Protectors [**J**] into the lower bash plate area.

NOTE: Leave fasteners loose to allow ORFB movement.

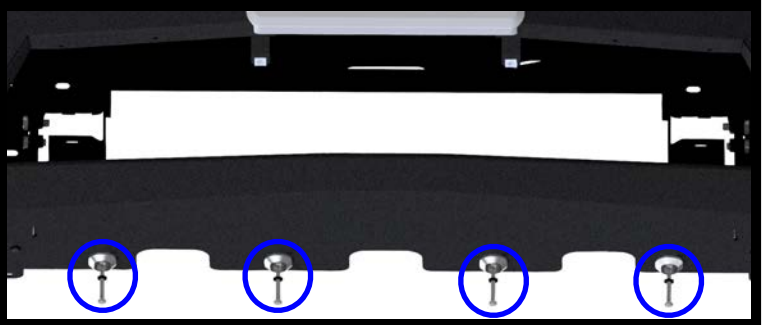

79 ALL VEHICLES

Route Parking Sensor Harness

1. Plug OEM Parking Sensor harness back into vehicle.
2. Connect Parking Sensor harness to the extension cables attaching into the parking sensor housings.
3. Using Zip-Ties or tape, secure the parking sensor harness to suitable points on either the ORFB [**A**] or the Bumper Fascia.

NOTE: It may be necessary to wait for the Bumper Fascia to be reinstalled before attaching harness (addressed in a later step).



80 ALL VEHICLES

ORFB Fastener Tightening

1. The hardware tightening process is done progressively. As opposed to fully tightening one bolt at a time, work your way across the ORFB progressively increasing the tightness of the bolts to help with alignment.
2. (4) M6 x 40mm - Bolts on Lower Bash Plate = 13Nm (Dry) or 11Nm (Anti-Seize)
3. (2) M12 x 20mm - Bolts from ORFB to Winch Cradle = 110Nm (Dry) or 82Nm (Anti-Seize).
4. (10) M10 - Bolts from Bumper Mount to Chassis Mount = 90Nm (Dry) or 74Nm (Anti-Seize).
5. (10) M10 - Bolts from Bumper Mount to ORFB = 90Nm (Dry) or 74Nm (Anti-Seize).

NOTE: if WK2 Sump Protection Plate Is installed, tighten the (2) M8 x 50mm Bolts in the rear mounting points (addressed in Step 45).

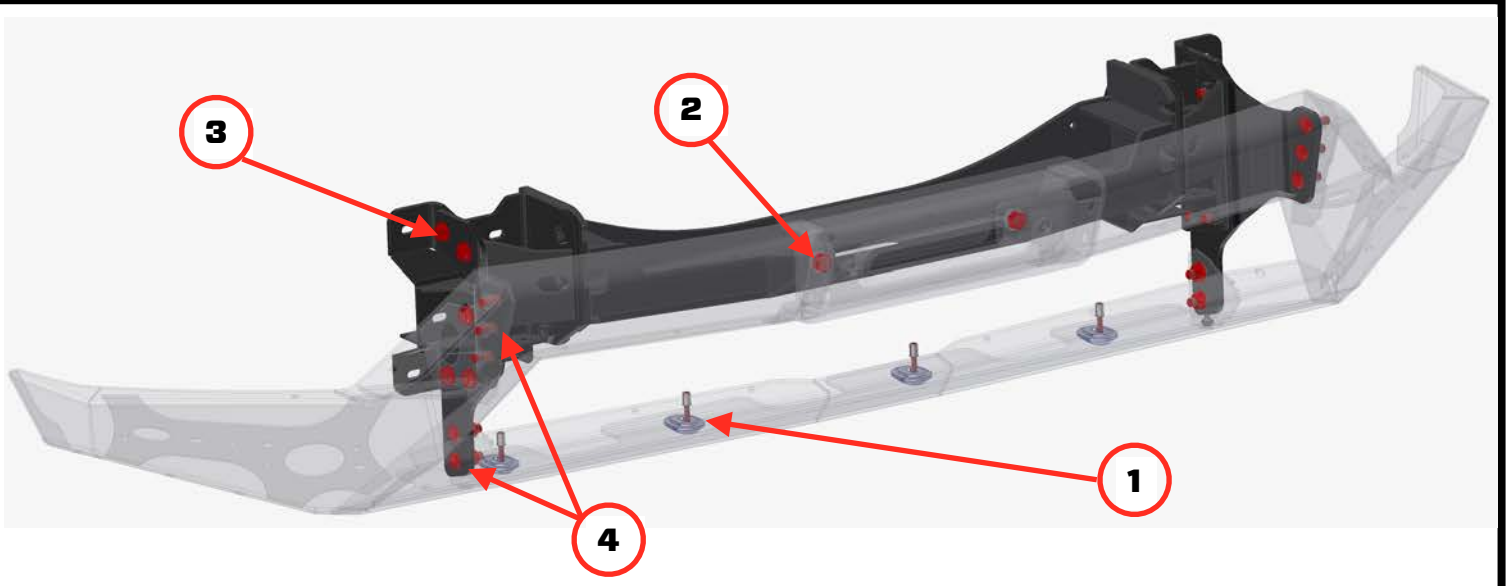

81 LAREDO, LIMITED, OVERLAND

Reinstall Bumper Fascia

1. Reattach the Bumper Fascia and wheel liner to the vehicle.
2. Ensure the Bumper Fascia has sufficient clearance from the ORFB before tightening the fasteners into place.

NOTE: This step may not be relevant depending on bumper variant.



82 ALL VEHICLES

Reattatch Parking Sensor Harness

1. With the Bumper Fascia back in-place and all the parking sensors positioned on the ORFB, reconnect the harness back onto the vehicle.



IF YOU HAVE:
- WINCH + ACC GUARD ***(Go To Step 83)***
- No ACC ***(Skip to step 84)***

83 WINCH + ACC GUARD

ACC Guard Alignment

1. Adjust ACC Mount Assembly so that green face has approximately 5 - 6mm clearance to the blue face then tighten into place.

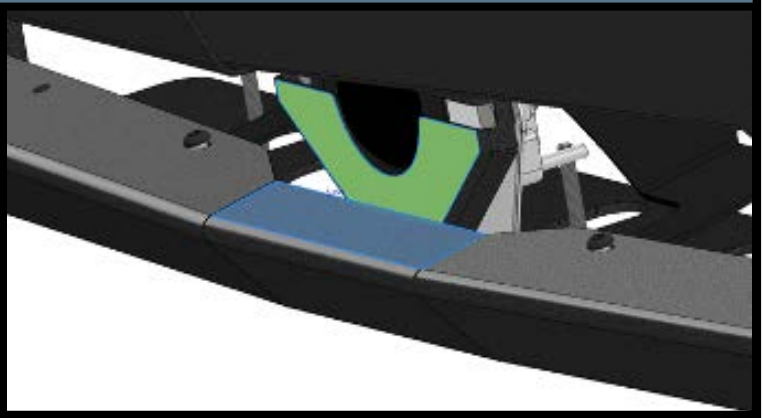

84

Vehicle Bumper to ORFB Clearance Adjustment

1. If the Bumper fascia is contacting or there is too much clearance with the ORFB, Bumper Support Brackets [**E**] can be used to better locate the vehicle bumper positioning.
2. Once an optimal position is decided on, secure Bumper Support Brackets [**E**] using an M6 x 20mm Bolt [**O**] with M6 Wedge-Lock Washer [**P**] and M6 Flange Nut [**R**].





85

Preparing ORFB for Grille

1. Clip (2) M6 Sheetmetal Nuts [**L**] supplied at the highlighted tabs on the ORFB; align the holes.

NOTE: Take care to not scratch through the powder coat.

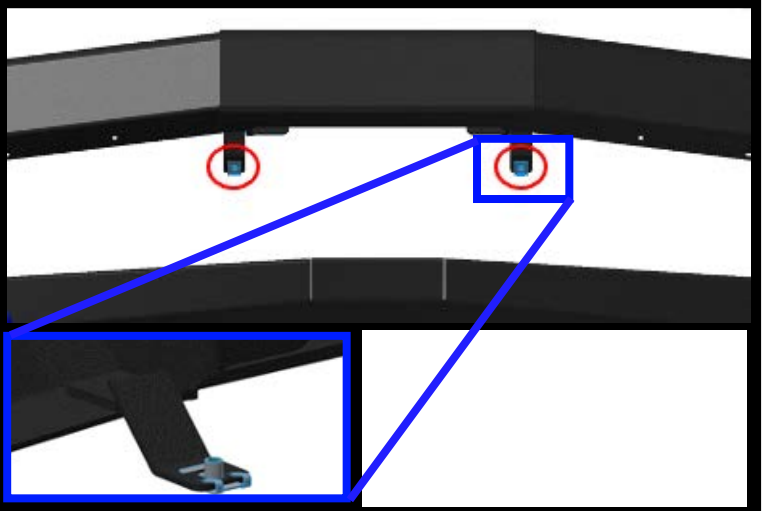

IF YOU HAVE:
- Off-Road Front Bumper (Apex Grille) ***(Go to Step 86)***
- Off-Road Front Bumper (Nomad Grille) ***(Go to Step 87)***
- None of the above ***(Go to Step 92)***

WK2 OFF-ROAD FRONT BUMPER -- APEX GRILLE

86 APEX GRILLE

Installing Apex Grille

1. Locate Grille [**A**] and Grille Fascia [**B**] together ensuring the Grille bottom tag is located on the inside face of the Grille Fascia.

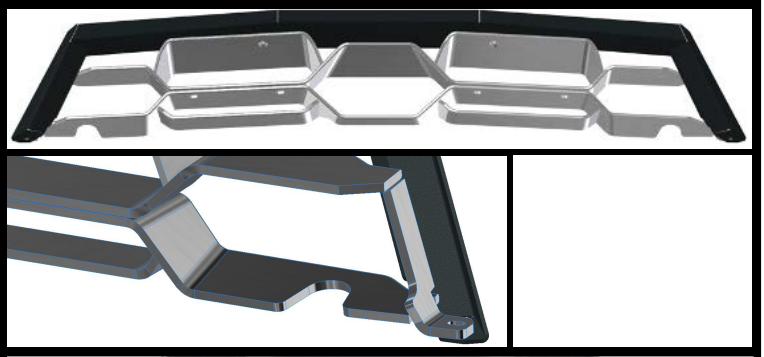

87 APEX GRILLE

Installing Apex Grille 2

1. Position the Grille [**A**] and Grille Fascia [**B**] from the previous step up into the ORFB and align with (2) M6 x 20mm Countersunk Socket [**C**] fastened to the installed M6 Sheet Metal nuts (red square). Don't tighten.
2. Install M6 x 25mm Bolts [**E**] with M6 Wedge-Lock Washers [**D**] both sides and fasten using M6 Flanged Nyloc Nut [**F**].
3. Fasten all hardware once aligned.

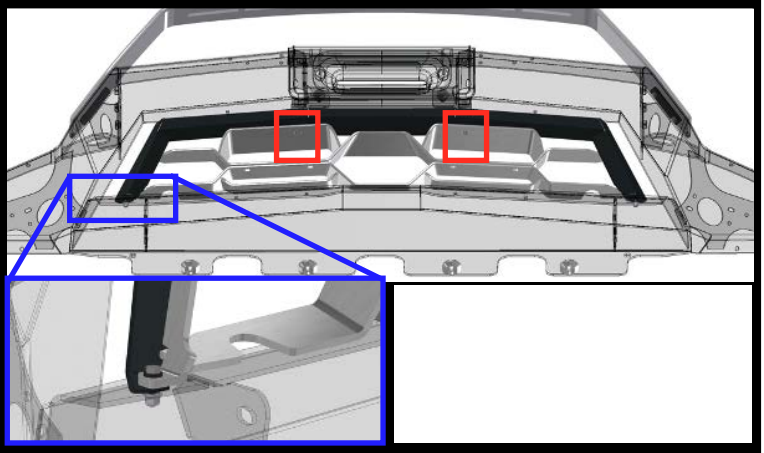

INSTALLATION COMPLETE -- WK2 OFF-ROAD FRONT BUMPER (APEX GRILLE)

WK2 OFF-ROAD FRONT BUMPER -- NOMAD GRILLE

88 NOMAD GRILLE

Install Nomad Grille

1. Locate LH and RH "Mount Grille Inner" Brackets [**B**] and LH and RH "Mount Grille Outer" Brackets [**C**].
2. Fasten M6 x 20mm Socket Button Head Bolt [**E**] with M6 Flange Nuts [**F**] into the highlighted holes; do NOT tighten the bolts, allow movement.

NOTE: If "ACC Non-Winch" Mount and/or Side Mount Number Plate is installed, remove fastener and install both brackets together.

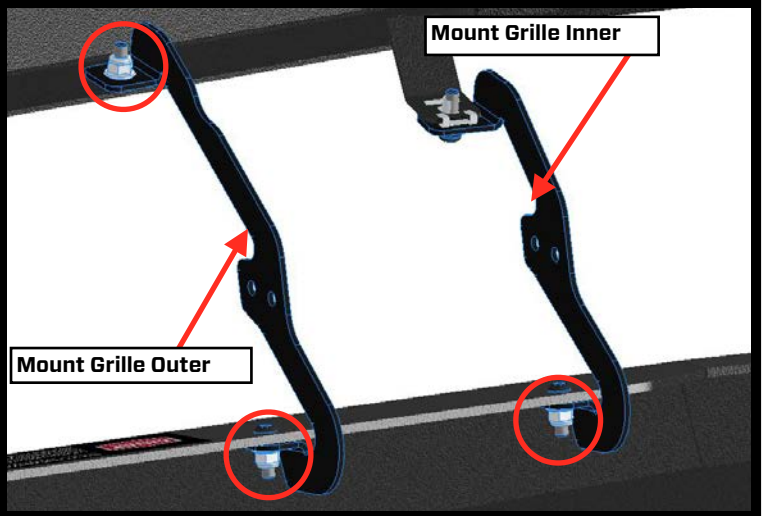

89 NOMAD GRILLE

Install Nomad Grille

1. Locate Grille Bars to the loosely installed Mount Grille Brackets
2. Fasten the Grille Bars using M6 x 20mm Socket Button Head Bolts [**E**] with M6 Flange Nuts [**F**]. Before fully tightening; ensure both Grille Bar sides are equal.



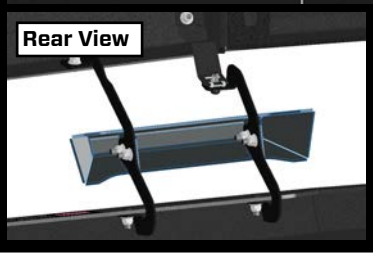

90 NOMAD GRILLE

Install Nomad Grille

1. Locate outer Vent Bar [**D**] to ORFB [**A**] with the smaller face pointing upward; reference the *Front View* for orientation when selecting the LH and RH Vent Bars.
2. Fasten Vent Bars into place using M6 x 20mm Socket Button Head Bolts [**E**] with M6 Flange Nuts [**F**]. Prior to tightening, align both sides evenly.

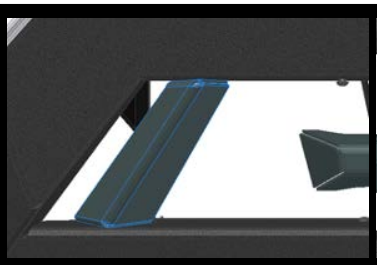

Front View

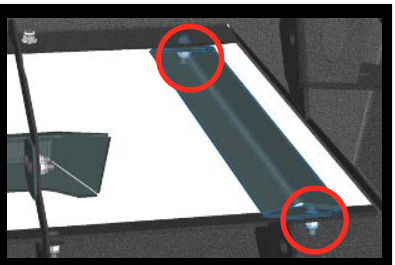

Rear View

INSTALLATION COMPLETE -- WK2 OFF-ROAD FRONT BUMPER (NOMAD GRILLE)

91 ORFB STONE GUARDS

Install Stone Guards

1. Install LH and RH Stone Guards [**C**] using (4) M6 Socket Button Head screws [**O**] with M6 Locking Washers [**P**].
2. Trim vehicle OEM Wheel Liner to meet and attach to Stone Guards.

NOTE: Additional cut outs on the stone guards give areas to tether the wheel liner.

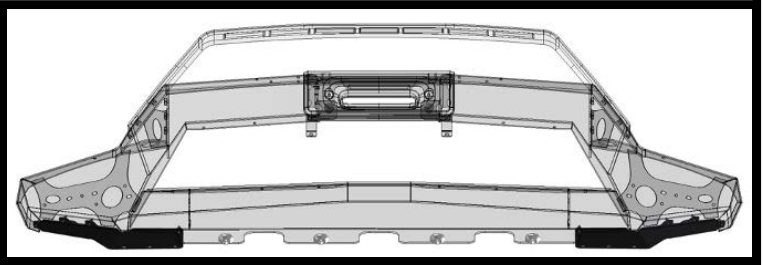

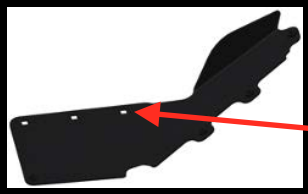

Attachment point for wheel liners.

92

Install Plastic Plugs into unused Holes

1. Install (4) Ø14mm Blanking Plugs [**S**] (marked yellow) into the unused holes for the Mach II Aero-Bar**.**
2. Install (8) Dia 7.5 x 16mm X-Mas Tree Plug [**T**] (marked red) into the unused holes for the Advanced Parking Sensor KIT and/or Number Plate Mount holes.

NOTE: Only applicable for ORFB with unused bolt holes.



INSTALLATION COMPLETE -- WK2 OFF-ROAD FRONT BUMPER

APPENDIX

BUMPER FASCIA TRIMMING PREPERATION

The ORFB Install Instructions DOES NOT offer a comprehensive guide to every bumper style, however the same process can be applied.

- Remove all grilles, fog lights, and/or parking sensors and set aside before trimming.
- Grille features could be completely removed from the bumper OR could be trimmed and reinstalled with the Bumper Fascia depending on individual preference and bumper style.
- Prior to trimming; mark out the area using a marker or tape.
- IMPORTANT: mark and measure accurately from the centreline. Failure to do so will result in issues with the install.
- Check your measurements before starting trim!
- Start by trimming the most prominent parts of the bumper obstructing clearance (outlined below) then review how much additional material needs to be removed to prevent the Bumper Fascia contacting the ORFB.
- Test fit bumper during trimming process to check clearance to Mounts and Winch access.
- Dress all trimmed edges using a smooth file.

Note: Dimensions shown below can be used as approximations for each variant of the Bumper Fascia.

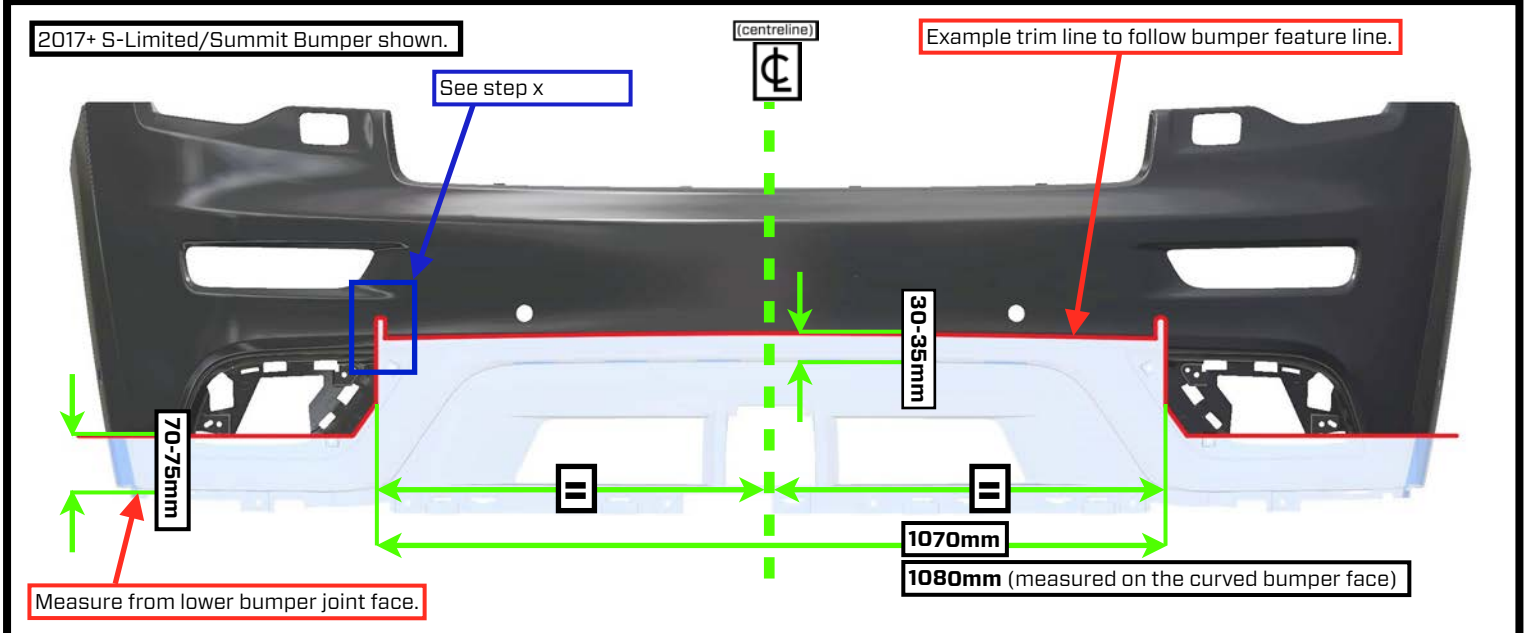

JUMP BACK TO TRIMMING

2015 Jeep Grand Cherokee Overland



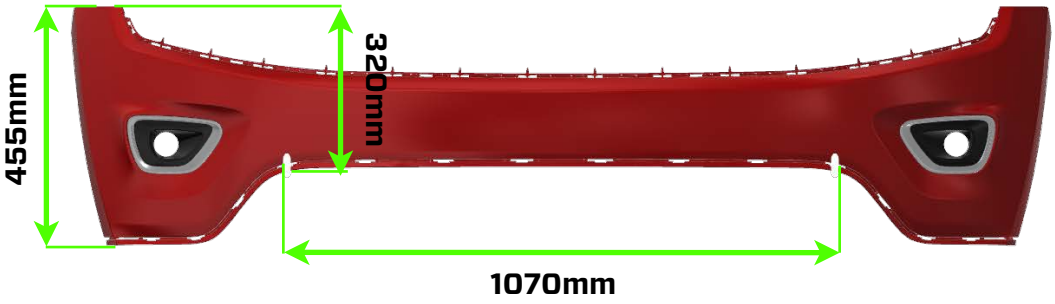

2017 Jeep Grand Cherokee Overland



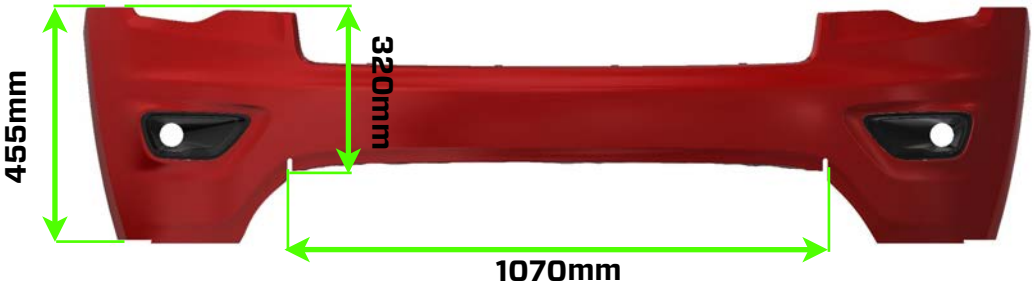

2017 Jeep Grand Cherokee S-Limited



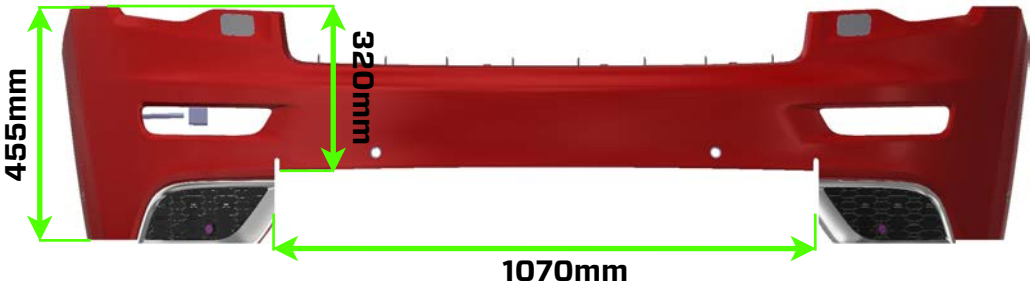

2017 Jeep Grand Cherokee SRT



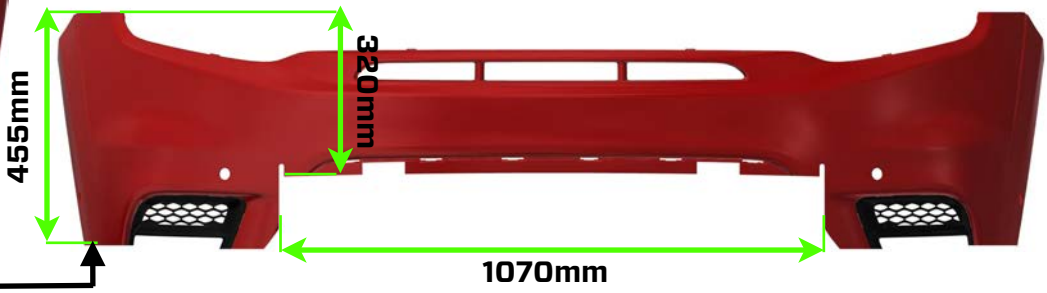

NOTE: Some SRT Models benefit from cutting outer Bumper panel above the ORFB top face.

TROUBLESHOOTING

[START]

1 TROUBLESHOOTING

FAULTY PARKING SESNOR READING

1. If you find after installing the Advanced Parking Sensor KIT the sensors give false readings, the likely cause is excessive tighten of the housing fasteners. To fix this, loosen off the (4) M6 x 60mm Countersunk Bolts enough to reduce the pressure on the sensor.

TROUBLESHOOTING

[END]

SUPPORT

Find answers online.
www.chiefproducts.com.au/pages/support

Having troubles? Make sure you've downloaded the most recent version of these instructions from our website. We occasionally make updates.
www.chiefproducts.com.au/installation/wk2-roof-rack.pdf

If you need additional help, send us an email.
support@chiefproducts.com.au

MAINTENANCE

FASTENERS

- Check fastener tightness regularly and tighten if required. We recommend checking fasteners after every large off-road trip.

CORROSION PROTECTION

- After an off-road trip; rinse all mud, sand or debris off the product.
- After driving in salt water; rinse product thoroughly with fresh water.

EXTRA CARE

- If you're planning to drive in a salty environment; spray fasteners with WD40 or an equivalent.
- If you're planning to drive in a salty environment; spray product with Lanolin or an equivalent.
- Spray deep scratches (before they rust) with touch up paint to help inhibit corrosion.

SHARE

Looking to share epic photos of your WK2?
Send us your photos - Unboxing, Fully Installed, Painted-In-Mud or out Adventuring in some beautiful location. If you share with us, we'll share with our followers.

UPLOAD
www.chiefproducts.com.au/share

EMAIL
connect@chiefproducts.com.au

HASHTAG
#ChiefProducts #GrandAdventure